ORDER NO.MTNC070305CE
B34 Canada: B07

# Service Manual

## High Definition Plasma Television

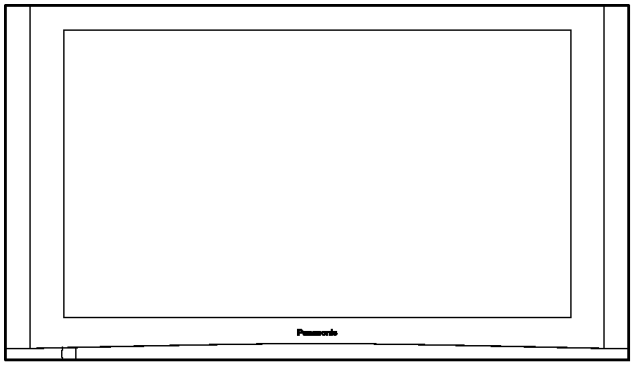

# TH-42PX77U
# TH-42PE77U

GP10DHU Chassis

## Specifications

| | | |
|---|---|---|
| **Power Source** | AC 120 V, 60 Hz | |
| **Power Consumption** | | |
| **Maximum** | 387 W | |
| **Standby condition** | 0.2 W | |
| **Plasma Display panel** | | |
| **Drive method** | AC type | |
| **Aspect Ratio** | 16 : 9 | |
| **Visible screen size (W × H × Diagonal) (No. of pixels)** | 106 cm<br>36.3 ” × 20.3 ” × 41.6 ” (922 mm × 518 mm × 1,057 mm)<br>786,432 (1,024 (W) × 768 (H)) [3,072 × 768 dots] | |
| **Sound** | | |
| **Audio Output** | 20 W [10 W + 10 W] (10 % THD) | |
| **Channel Capability (Digital/Analog)** | VHF/UHF: 2 - 69, CATV: 1 - 135 | |
| **Operating Conditions** | Temperature: 32 °F - 104 °F (0 °C - 40 °C) | |
| | Humidity: 20 % - 80 % RH (non-condensing) | |
| **Connection Terminals** | | |
| **INPUT 1-3** | VIDEO: | RCA PIN Type × 1 1.0 V [p-p] (75 ohm) |
| | S-VIDEO: | Mini DIN 4-pin Y: 1.0 V [p-p] (75 ohm) C: 0.286 V [p-p] (75 ohm) |
| | AUDIO L-R: | RCA PIN Type × 2 0.5 V [rms] |
| **COMPONENT VIDEO INPUT 1-2** | Y: | 1.0 V [p-p] (including synchronization) |
| | $P_B$, $P_R$: | ± 0.35 V [p-p] |
| | AUDIO L-R: | RCA PIN Type × 2 0.5 V [rms] |
| **HDMI 1-2 AUDIO IN** | TYPE A Connector × 2 | |
| | This TV supports “HDAVI Control 2” function. | |
| | AUDIO L-R: | RCA PIN Type × 2 0.5 V [rms] |
| **Card slot** | SD CARD slot × 1 | |
| **AV PROG. OUT** | VIDEO: | RCA PIN Type × 1 1.0 V [p-p] (75 ohm) |
| | AUDIO L-R: | RCA PIN Type × 2 0.5 V [rms] |
| **DIGITAL AUDIO OUT** | PCM/Dolby Digital, Fiber Optic | |

Panasonic®

© 2007 Matsushita Electric Industrial Co., Ltd. All rights reserved. Unauthorized copying and distribution is a violation of law.

| | | |
|---|---|---|
| **FEATURES** | 3D Y/C FILTER | |
| | CLOSED CAPTION | V-Chip |
| | Photo Viewer | HDAVI Control 2 |
| **Dimensions (W × H × D)** | | |
| **Including pedestal** | 44.7 ” × 27.0 ” × 13.0 ” (1,134 mm × 686 mm × 330 mm) (TH-42PX77U) | |
| | 44.7 ” × 27.0 ” × 12.7 ” (1,134 mm × 686 mm × 321 mm) (TH-42PE77U) | |
| **TV Set only** | 44.7 ” × 25.3 ” × 3.92 ” (1,134 mm × 641 mm × 99.5 mm) | |
| **Weight** | | |
| **Including pedestal** | 77.2 lb. (35 kg) (TH-42PX77U) | |
| | 66.2 lb. (30 kg) (TH-42PE77U) | |
| **TV Set only** | 61.8 lb. (28 kg) (TH-42PX77U) | |
| | 60.7 lb. (27.5 kg) (TH-42PE77U) | |

**Note:**

- Design and Specifications are subject to change without notice. Weight and Dimensions shown are approximate.

**⚠ WARNING**

This service information is designed for experienced repair technicians only and is not designed for use by the general public.
It does not contain warnings or cautions to advise non-technical individuals of potential dangers in attempting to service a product.
Products powered by electricity should be serviced or repaired only by experienced professional technicians. Any attempt to service or repair the product or products dealt with in this service information by anyone else could result in serious injury or death.

# CONTENTS


Page

**1 Applicable signals** ···· **4**
**2 Safety Precautions** ···· **5**
2.1. General Guidelines ···· 5
**3 Prevention of Electro Static Discharge (ESD) to Electrostatically Sensitive (ES) Devices** ···· **6**
**4 About lead free solder (PbF)** ···· **7**
**5 Service Hint** ···· **8**
**6 Plasma panel replacement method** ···· **9**
6.1. Remove the rear cover ···· 9
6.2. Remove the rear terminal cover ···· 9
6.3. Remove the P-Board ···· 9
6.4. Remove the Tuner unit ···· 9
6.5. Remove the A-Board ···· 9
6.6. Remove the side AV unit and the side AV bracket. ···· 9
6.7. Remove the G-Board and GS-Board ···· 10
6.8. Remove the D-Board ···· 11
6.9. Remove the SU-Board ···· 11
6.10. Remove the SD-Board ···· 11
6.11. Remove the SC-Board ···· 11
6.12. Remove the SS-Board ···· 12
6.13. Remove the C1-Board ···· 12
6.14. Remove the C2-Board ···· 12
6.15. Remove the speaker L, R ···· 12
6.16. Remove the stand brackets ···· 12
6.17. Remove the Plasma panel section from the Cabinet assy (glass) ···· 13
6.18. Remove the K-Board and the S-Board ···· 13
6.19. Replace the plasma panel (finished) ···· 14
**7 Caution statement** ···· **15**
7.1. Caution statement. ···· 15
**8 Location of Lead Wiring** ···· **16**

Page

8.1. Lead of Wiring (1) ···· 16
8.2. Lead of Wiring (2) ···· 17
8.3. Lead of Wiring (3) ···· 18
8.4. Lead of Wiring (4) ···· 19
8.5. Lead of Wiring (5) ···· 20
8.6. Lead of Wiring (6) ···· 21
**9 Self-check Function** ···· **22**
9.1. Check of the IIC bus lines ···· 22
9.2. Power LED Blinking timing chart ···· 23
9.3. No Power ···· 24
9.4. No Picture ···· 25
9.5. Local screen failure ···· 26
**10 Service Mode** ···· **27**
10.1. How to enter into Service Mode ···· 27
10.2. Service tool mode ···· 29
**11 Adjustment Procedure** ···· **30**
11.1. Driver Set-up ···· 30
11.2. Initialization Pulse Adjust ···· 31
11.3. P.C.B. (Printed Circuit Board) exchange ···· 31
11.4. Adjustment Volume Location ···· 32
11.5. Test Point Location ···· 32
**12 Adjustment** ···· **33**
12.1. White balance adjustment ···· 33
**13 Hotel mode** ···· **35**
**14 Conductor Views** ···· **37**
14.1. P-Board ···· 37
14.2. G, GS, K and S-Board ···· 40
14.3. A-Board ···· 41
14.4. D-Board ···· 44
14.5. C1-Board ···· 46
14.6. C2-Board ···· 47

14.7. SC-Board ··· 48
14.8. SU-Board ··· 51
14.9. SD-Board ··· 52
14.10. SS-Board ··· 53
**15 Schematic and Block Diagram ··· 55**
15.1. Schematic Diagram Note ··· 55
15.2. Main Block Diagram ··· 56
15.3. P-Board Block Diagram ··· 57
15.4. P-Board (1 of 6) Schematic Diagram ··· 58
15.5. P-Board (2 of 6) Schematic Diagram ··· 59
15.6. P-Board (3 of 6) Schematic Diagram ··· 60
15.7. P-Board (4 of 6) Schematic Diagram ··· 61
15.8. P-Board (5 of 6) Schematic Diagram ··· 62
15.9. P-Board (6 of 6) Schematic Diagram ··· 63
15.10. G, GS, K and S-Board Block and Schematic Diagram ··· 64
15.11. A-Board (1 of 5) Block Diagram ··· 65
15.12. A-Board (2 of 5) Block Diagram ··· 66
15.13. A-Board (3 of 5) Block Diagram ··· 67
15.14. A-Board (4 of 5) Block Diagram ··· 68
15.15. A-Board (5 of 5) Block Diagram ··· 69
15.16. A-Board (1 of 12) Schematic Diagram ··· 70
15.17. A-Board (2 of 12) Schematic Diagram ··· 71
15.18. A-Board (3 of 12) Schematic Diagram ··· 72
15.19. A-Board (4 of 12) Schematic Diagram ··· 73
15.20. A-Board (5 of 12) Schematic Diagram ··· 74
15.21. A-Board (6 of 12) Schematic Diagram ··· 75
15.22. A-Board (7 of 12) Schematic Diagram ··· 76
15.23. A-Board (8 of 12) Schematic Diagram ··· 77
15.24. A-Board (9 of 12) Schematic Diagram ··· 78
15.25. A-Board (10 of 12) Schematic Diagram ··· 79
15.26. A-Board (11 of 12) Schematic Diagram ··· 80
15.27. A-Board (12 of 12) Schematic Diagram ··· 81
15.28. D-Board Block Diagram ··· 82
15.29. D-Board (1 of 6) Schematic Diagram ··· 83
15.30. D-Board (2 of 6) Schematic Diagram ··· 84
15.31. D-Board (3 of 6) Schematic Diagram ··· 85
15.32. D-Board (4 of 6) Schematic Diagram ··· 86
15.33. D-Board (5 of 6) Schematic Diagram ··· 87
15.34. D-Board (6 of 6) Schematic Diagram ··· 88
15.35. C1 and C2-Board Block Diagram ··· 89
15.36. C1-Board (1 of 2) Schematic Diagram ··· 90
15.37. C1-Board (2 of 2) Schematic Diagram ··· 91
15.38. C2-Board (1 of 2) Schematic Diagram ··· 92
15.39. C2-Board (2 of 2) Schematic Diagram ··· 93
15.40. SC, SU and SD-Board Block Diagram ··· 94
15.41. SC-Board (1 of 2) Schematic Diagram ··· 95
15.42. SC-Board (2 of 2) Schematic Diagram ··· 96
15.43. SU-Board (1 of 2) Schematic Diagram ··· 97
15.44. SU-Board (2 of 2) Schematic Diagram ··· 98
15.45. SD-Board (1 of 2) Schematic Diagram ··· 99
15.46. SD-Board (2 of 2) Schematic Diagram ··· 100
15.47. SS-Board Block Diagram ··· 101
15.48. SS-Board (1 of 2) Schematic Diagram ··· 102
15.49. SS-Board (2 of 2) Schematic Diagram ··· 103
**16 Exploded Views & Replacement Parts List ··· 105**
16.1. Exploded Views ··· 105
16.2. Packing Exploded Views (Accessories box) ··· 106
16.3. Replacement Parts List Notes ··· 107
16.4. Mechanical Replacement Parts List (PDP TV) ··· 108
16.5. Mechanical Replacement Parts List (Stand) ··· 109
16.6. Electrical Replacement Parts List ··· 110

# 1 Applicable signals

* Mark: Applicable input signal for Component (Y, $P_B$, $P_R$), HDMI

| | horizontal frequency (kHz) | vertical frequency (Hz) | COMPONENT | HDMI |
|---|---|---|---|---|
| 525 (480) / 60i | 15.73 | 59.94 | * | * |
| 525 (480) /60p | 31.47 | 59.94 | * | * |
| 750 (720) /60p | 45.00 | 59.94 | * | * |
| 1,125 (1,080) /60i | 33.75 | 59.94 | * | * |
| 1,125 (1,080) /60p | 67.43 | 59.94 | | * |
| 1,125 (1,080) /60p | 67.50 | 60.00 | | * |

**Note** • Signals other than those shown above may not be displayed properly.
• The above signals are reformatted for optimal viewing on your display.

# 2 Safety Precautions

## 2.1. General Guidelines

1. When servicing, observe the original lead dress. If a short circuit is found, replace all parts which have been overheated or damaged by the short circuit.
2. After servicing, see to it that all the protective devices such as insulation barriers, insulation papers shields are properly installed.
3. After servicing, make the following leakage current checks to prevent the customer from being exposed to shock hazards.

### 2.1.1. Leakage Current Cold Check

1. Unplug the AC cord and connect a jumper between the two prongs on the plug.
2. Measure the resistance value, with an ohmmeter, between the jumpered AC plug and each exposed metallic cabinet part on the equipment such as screwheads, connectors, control shafts, etc. When the exposed metallic part has a return path to the chassis, the reading should be between 1Mohm and 5.2Mohm.
   When the exposed metal does not have a return path to the chassis, the reading must be ∞ .

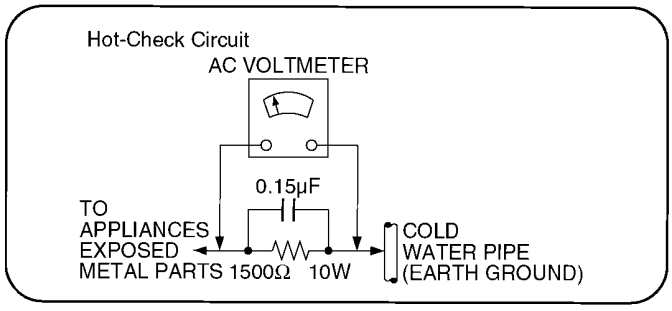


Figure 1

### 2.1.2. Leakage Current Hot Check (See Figure 1.)

1. Plug the AC cord directly into the AC outlet. Do not use an isolation transformer for this check.
2. Connect a 1.5kohm, 10 watts resistor, in parallel with a 0.15µF capacitors, between each exposed metallic part on the set and a good earth ground such as a water pipe, as shown in Figure 1.
3. Use an AC voltmeter, with 1000 ohms/volt or more sensitivity, to measure the potential across the resistor.
4. Check each exposed metallic part, and measure the voltage at each point.
5. Reverse the AC plug in the AC outlet and repeat each of the above measurements.
6. The potential at any point should not exceed 0.75 volts RMS. A leakage current tester (Simpson Model 229 or equivalent) may be used to make the hot checks, leakage current must not exceed 1/2 milliamp. In case a measurement is outside of the limits specified, there is a possibility of a shock hazard, and the equipment should be repaired and rechecked before it is returned to the customer.

# 3 Prevention of Electro Static Discharge (ESD) to Electrostatically Sensitive (ES) Devices

Some semiconductor (solid state) devices can be damaged easily by static electricity. Such components commonly are called Electrostatically Sensitive (ES) Devices. Examples of typical ES devices are integrated circuits and some field-effect transistors and semiconductor "chip" components. The following techniques should be used to help reduce the incidence of component damage caused by electro static discharge (ESD).

1. Immediately before handling any semiconductor component or semiconductor-equipped assembly, drain off any ESD on your body by touching a known earth ground. Alternatively, obtain and wear a commercially available discharging ESD wrist strap, which should be removed for potential shock reasons prior to applying power to the unit under test.
2. After removing an electrical assembly equipped with ES devices, place the assembly on a conductive surface such as aluminum foil, to prevent electrostatic charge buildup or exposure of the assembly.
3. Use only a grounded-tip soldering iron to solder or unsolder ES devices.
4. Use only an anti-static solder removal device. Some solder removal devices not classified as "anti-static (ESD protected)" can generate electrical charge sufficient to damage ES devices.
5. Do not use freon-propelled chemicals. These can generate electrical charges sufficient to damage ES devices.
6. Do not remove a replacement ES device from its protective package until immediately before you are ready to install it. (Most replacement ES devices are packaged with leads electrically shorted together by conductive foam, aluminum foil or comparable conductive material).
7. Immediately before removing the protective material from the leads of a replacement ES device, touch the protective material to the chassis or circuit assembly into which the device will be installed.

   **Caution**

   Be sure no power is applied to the chassis or circuit, and observe all other safety precautions.
8. Minimize bodily motions when handling unpackaged replacement ES devices. (Otherwise ham less motion such as the brushing together of your clothes fabric or the lifting of your foot from a carpeted floor can generate static electricity (ESD) sufficient to damage an ES device).

**IMPORTANT SAFETY NOTICE**

There are special components used in this equipment which are important for safety.
These parts are marked by ⚠ in the schematic diagrams, Exploded Views and replacement parts list. It is essential that these critical parts should be replaced with manufacturer's specified parts to prevent shock, fire, or other hazards. Do not modify the original design without permission of manufacturer.

# 4 About lead free solder (PbF)

**Note: Lead is listed as (Pb) in the periodic table of elements.**

**In the information below, Pb will refer to Lead solder, and PbF will refer to Lead Free Solder.**

**The Lead Free Solder used in our manufacturing process and discussed below is (Sn+Ag+Cu).**

**That is Tin (Sn), Silver (Ag) and Copper (Cu) although other types are available.**

This model uses Pb Free solder in it's manufacture due to environmental conservation issues. For service and repair work, we'd suggest the use of Pb free solder as well, although Pb solder may be used.

PCBs manufactured using lead free solder will have the PbF within a leaf Symbol **PbF** stamped on the back of PCB.

**Caution**

- Pb free solder has a higher melting point than standard solder. Typically the melting point is 50 ~ 70 °F (30~40 °C) higher. Please use a high temperature soldering iron and set it to 700 ± 20 °F (370 ± 10 °C).
- Pb free solder will tend to splash when heated too high (about 1100 °F or 600 °C).

  If you must use Pb solder, please completely remove all of the Pb free solder on the pins or solder area before applying Pb solder. If this is not practical, be sure to heat the Pb free solder until it melts, before applying Pb solder.
- After applying PbF solder to double layered boards, please check the component side for excess solder which may flow onto the opposite side. (see figure below)

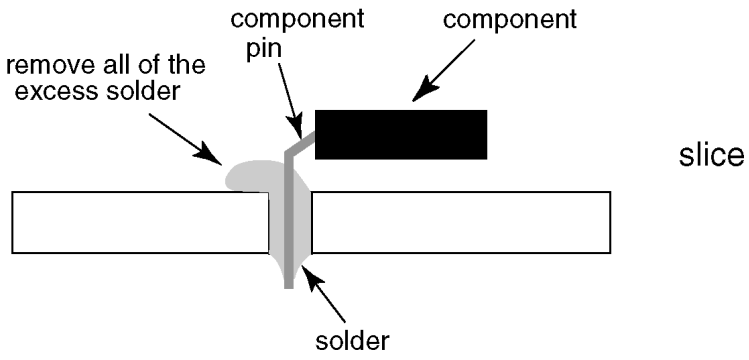


**Suggested Pb free solder**

There are several kinds of Pb free solder available for purchase. This product uses Sn+Ag+Cu (tin, silver, copper) solder. However, Sn+Cu (tin, copper), Sn+Zn+Bi (tin, zinc, bismuth) solder can also be used.

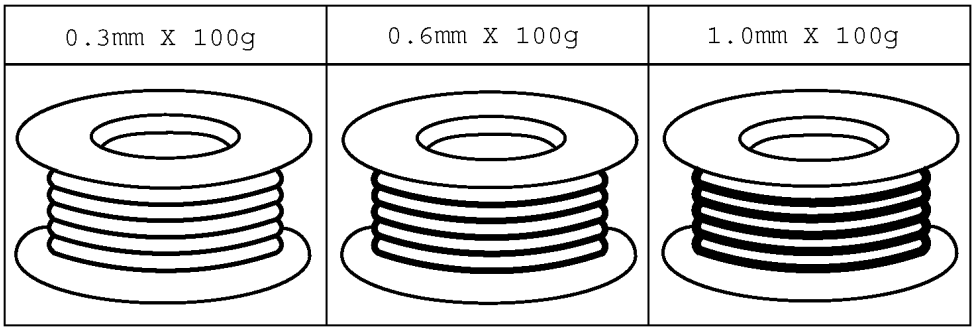

# 5 Service Hint

**Remove the Rear Cover**

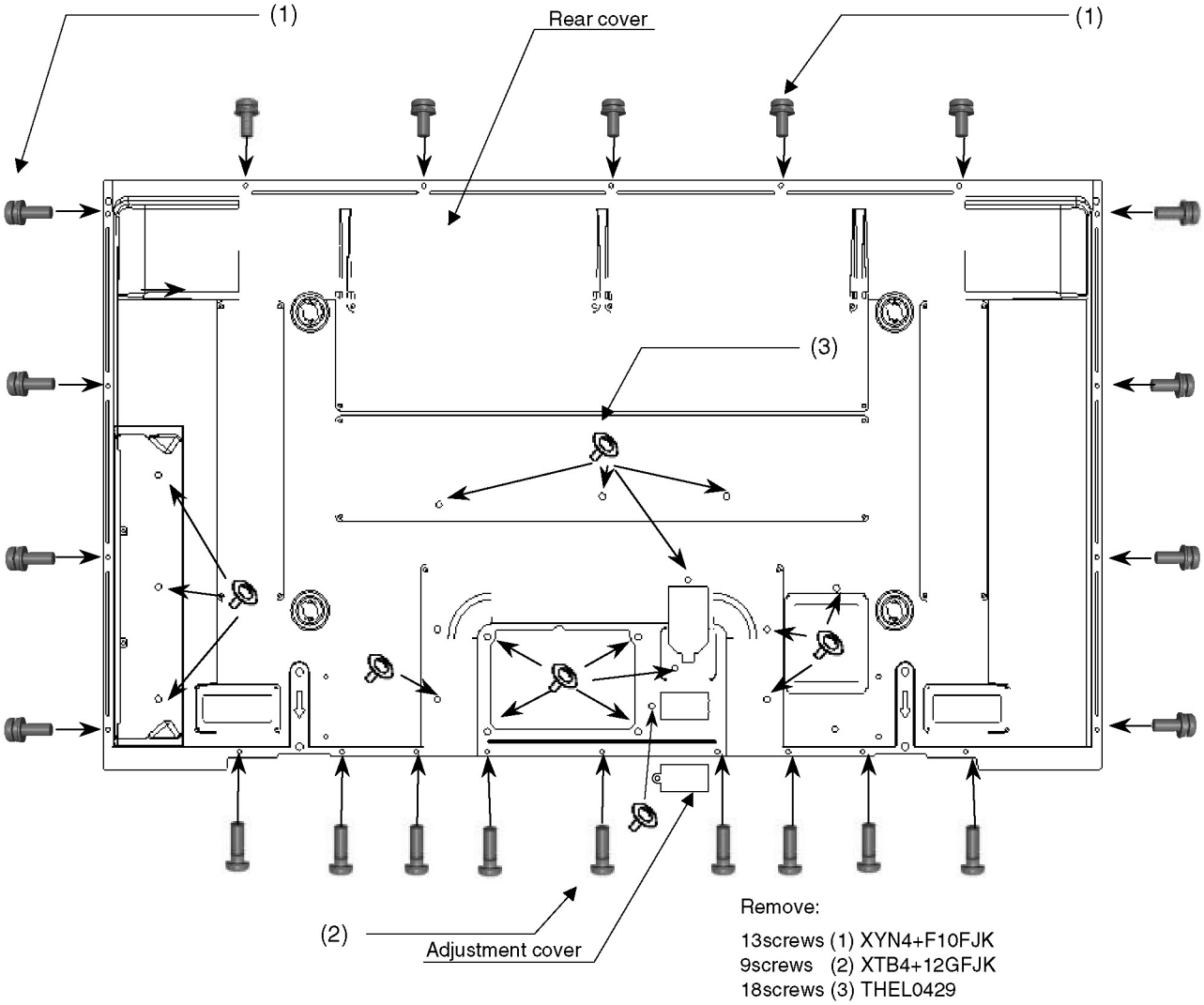


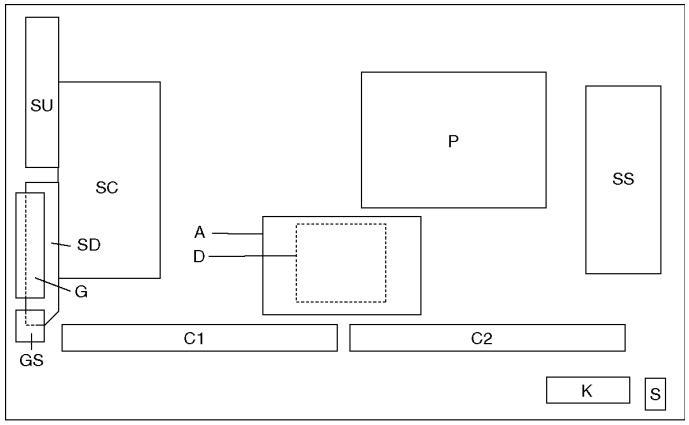


| Board Name | Function | Board Name | Function |
|---|---|---|---|
| P | Power Supply | D | Format Converter, Plasma AI, Sub-Field Processor |
| A | DC-DC Converter<br>Speaker out, Sound Processor<br>AV Terminal, AV Switch<br>Digital Signal Processor, Microcomputer<br>HDMI Interface, Peaks Lite 2 | C1 | Data Driver (Lower Right) |
| | | C2 | Data Driver (Lower Left) |
| | | SC | Scan Drive |
| | | SU | Scan out (Upper) |
| | | SD | Scan out (Lower) |
| | | SS | Sustain Drive |
| K | Remote receiver, Power LED | GS | SD Card Slot |
| S | Power Switch | G | Key Switch, Side Terminal |

# 6 Plasma panel replacement method

## 6.1. Remove the rear cover

1. See Service Hint (Section 5)

## 6.2. Remove the rear terminal cover

1. Remove the screws (×8 ⇨).
2. Remove the rear terminal cover.

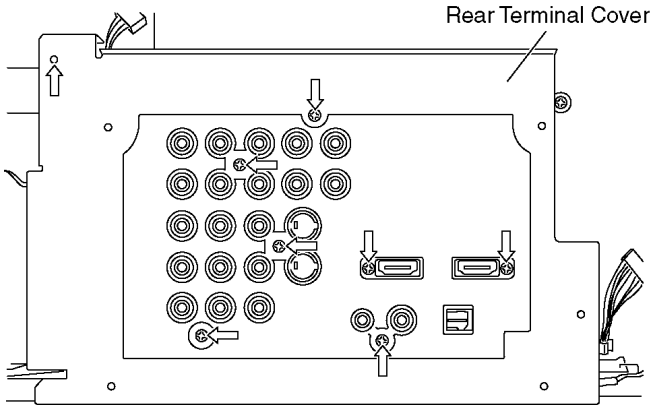


## 6.3. Remove the P-Board

**Caution:**

To remove P.C.B. wait 1 minute after power was off for discharge from electrolysis capacitors.

1. Unlock the cable clampers to free the cable.
2. Disconnect the connectors (P2, P6, P7, P9, P11, P12 and P25).
3. Remove the screws (×8 ➡) and remove the P-Board.

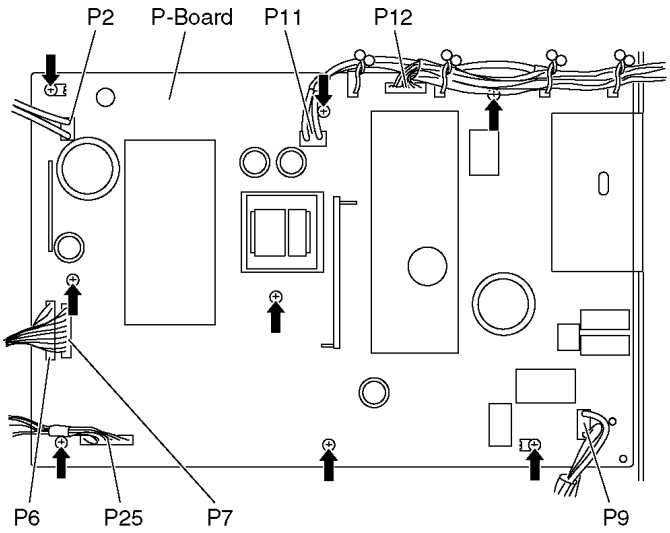


## 6.4. Remove the Tuner unit

1. Unlock the cable clampers to free the cable.
2. Disconnect the connectors (A1, A5, A6, A7, A12, A51 and A52).
3. Remove the screws (×2 ⇨) and remove the tuner cover.
4. Remove the screws (×4 ➡) and remove the tuner unit.

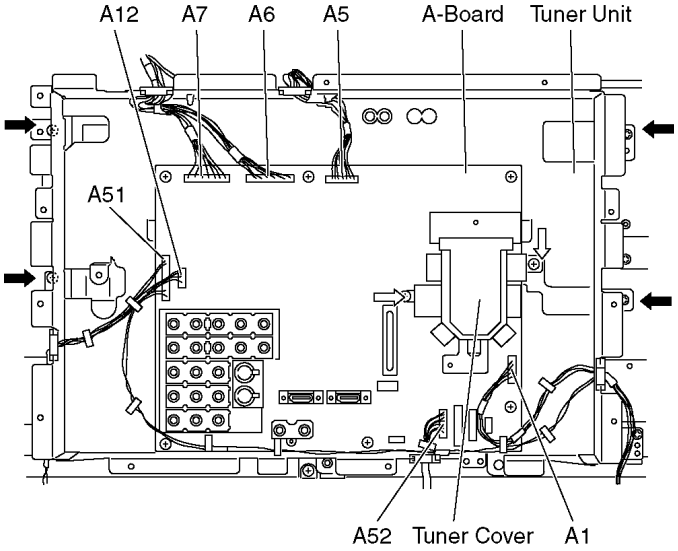


## 6.5. Remove the A-Board

1. Remove the tuner unit. (See section 6.4.)
2. Remove the screws (×6 ➡) and remove the A-Board.

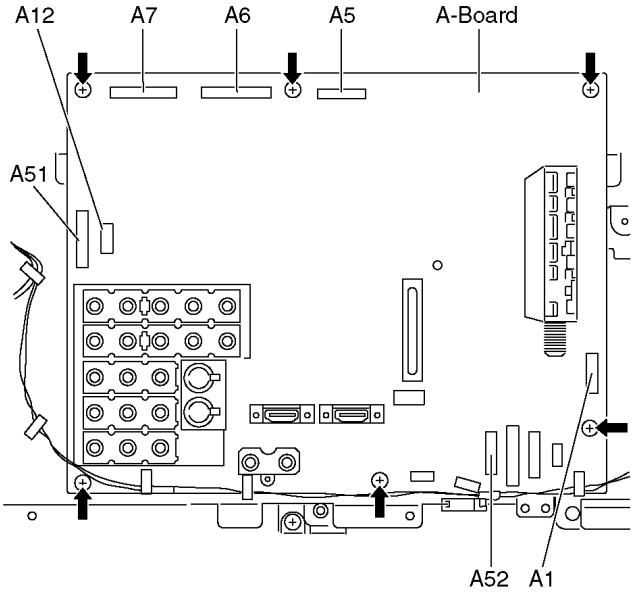


## 6.6. Remove the side AV unit and the side AV bracket.

1. Unlock the cable clampers to free the cable.
2. Disconnect the connectors (G51 and GS52) and relay connector.
3. Remove the screws (×4 ➡).
4. Remove the side AV unit.

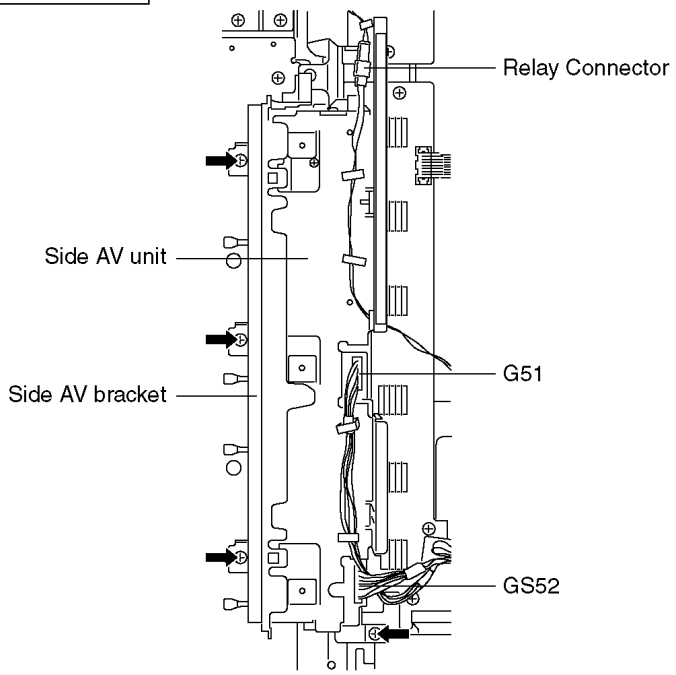


5. Remove the screw (×1 ➡ ).

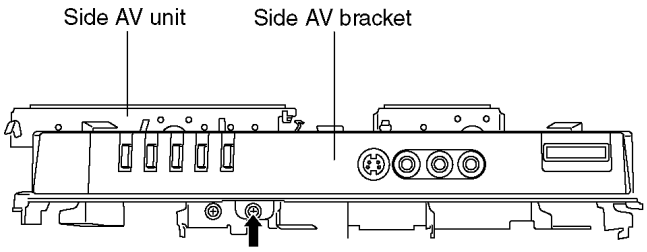


6. Remove the tabs (×4 ⇨ ) and Remove the side AV bracket.

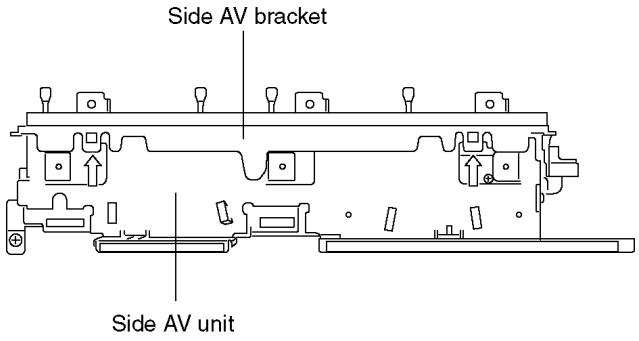


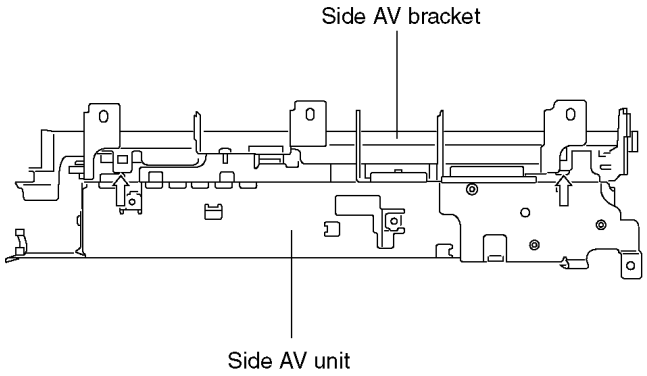


## 6.7. Remove the G-Board and GS-Board

1. Remove the side AV unit and the side AV bracket. (See section 6.6.)
2. Remove the screws (×2 ➡ ).

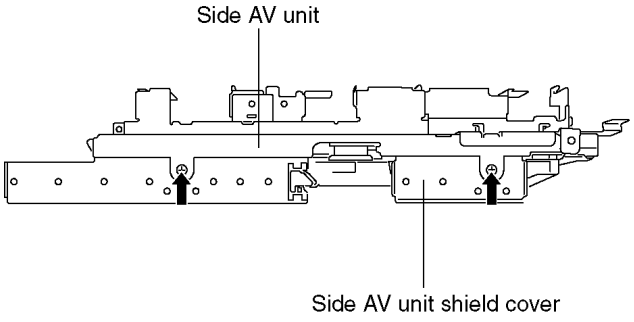


3. Remove the screws (×6 ➡ ) and remove the side AV unit shield cover and the control button.

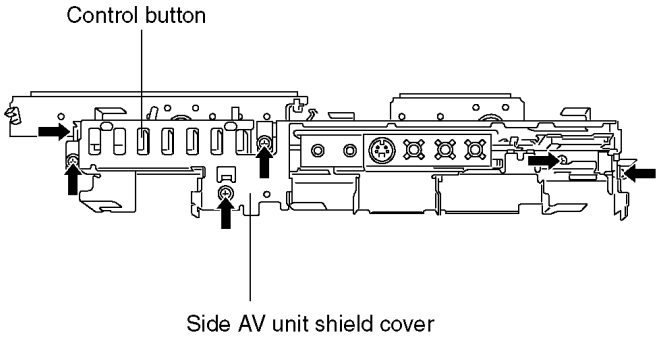


4. Remove the screws (×4 ➡ ) and remove the G-Board and GS-Board.

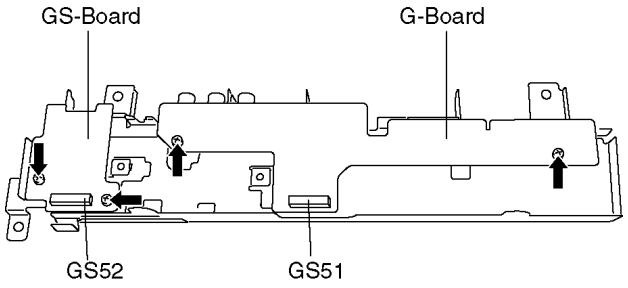

## 6.8. Remove the D-Board

1. Remove the tuner unit. (See section 6.4.)
2. Disconnect the connectors (D5 and D25).
3. Disconnect the flexible cables (D20, D31 and D32).
4. Remove the screws (×4 ➡) and remove the D-Board.

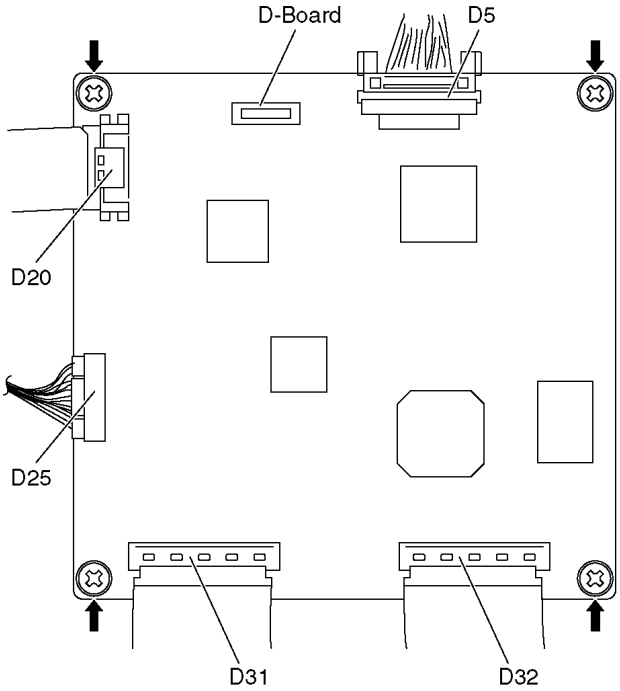


## 6.9. Remove the SU-Board

1. Remove the screws (×2 ➡).
2. Remove the flexible cables (SU1, SU2, SU3 and SU4) connected to the SU-Board and remove the bridge connector (SC45-SU45).
3. Slide the SU-Board to the left to disconnect from a connector (SC41-SU41) on the SC-Board and remove the SU-Board.

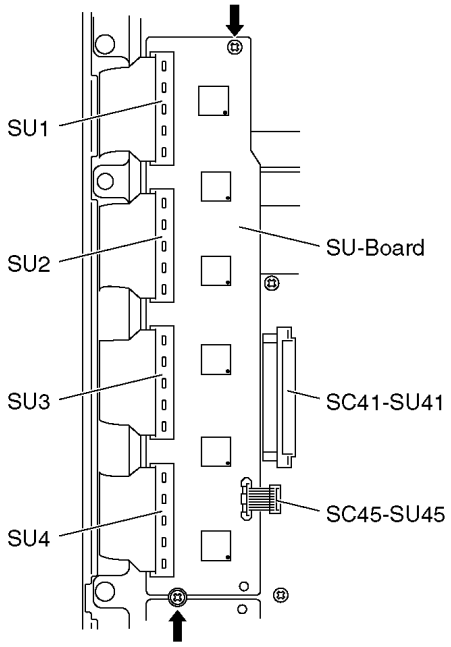


## 6.10. Remove the SD-Board

1. Remove the side AV unit and the side AV bracket. (See section 6.6.)
2. Remove the screws (×2 ➡).
3. Remove the flexible cables (SD1, SD2, SD3 and SD4) connected to the SD-Board and remove the bridge connector (SC46-SD46).
4. Slide the SD-Board to the left to disconnect from a connector (SC42-SD42) on the SC-Board and remove the SD-Board.

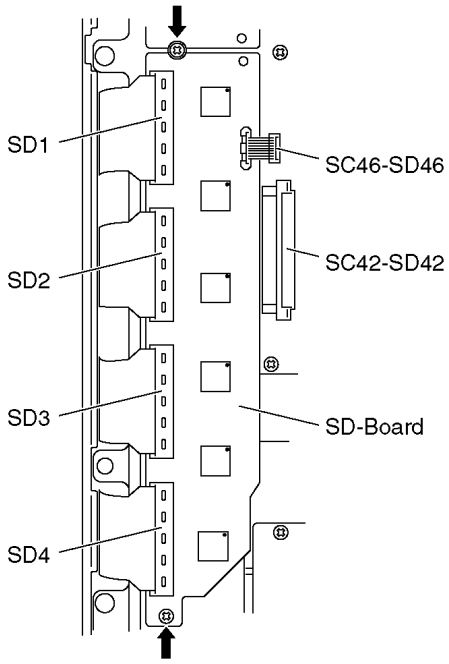


## 6.11. Remove the SC-Board

1. Remove the SU-Board and SD-Board. (See section 6.9. and 6.10.)
2. Unlock the cable clampers to free the cable.
3. Disconnect the connector (SC2).
4. Disconnect the flexible cable (SC20).
5. Remove the screws (×6 ➡) and remove the SC-Board.

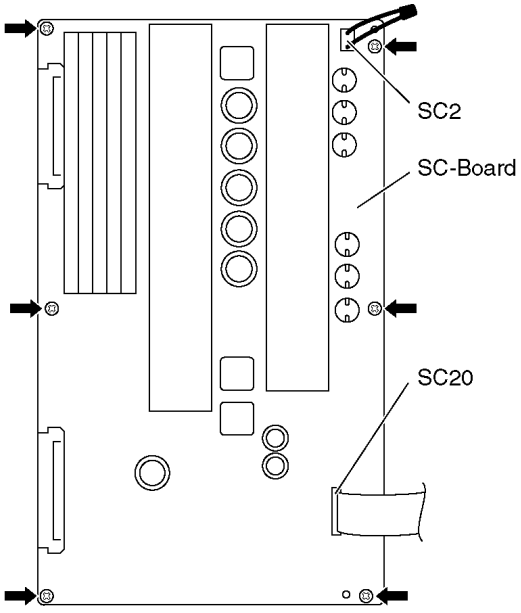

## 6.12. Remove the SS-Board

1. Disconnect the connectors (SS11, SS12 and SS23).
2. Disconnect the flexible cables (SS53A, SS54A, SS55A and SS56A).
3. Remove a short-jumper connector SS34 and re-use for new SS-Board.
4. Remove the screws (×6 ➡) and remove the SS-Board.

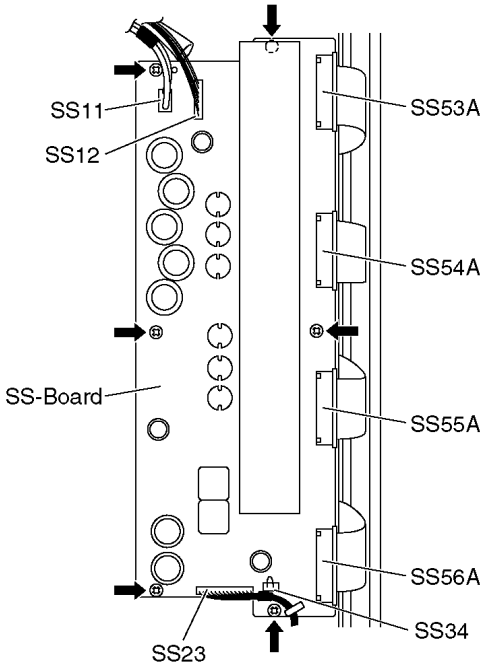


## 6.13. Remove the C1-Board

1. Remove the tuner unit. (See section 6.4.)
2. Unlock the cable clampers to free the cable.
3. Remove the flexible cables holder fastening screws (×8 ⇨).
4. Disconnect the flexible cables (CB1, CB2, CB3 and CB4).
5. Disconnect the flexible cables (C10 and C11).
6. Remove the screws (×4 ➡) and remove the C1-Board.

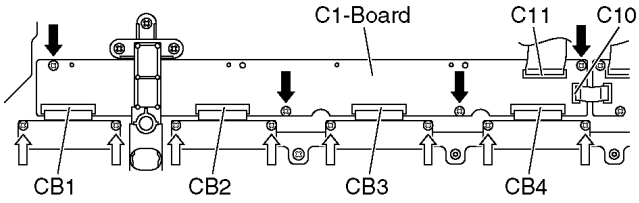


## 6.14. Remove the C2-Board

1. Remove the tuner unit. (See section 6.4.)
2. Unlock the cable clampers to free the cable.
3. Remove the flexible cables holder fastening screws (×8 ⇨).
4. Disconnect the flexible cables (CB5, CB6, CB7 and CB8).
5. Disconnect the flexible cables (C20 and C21).
6. Disconnect the connector (C23).
7. Remove the screws (×4 ➡) and remove the C2-Board.

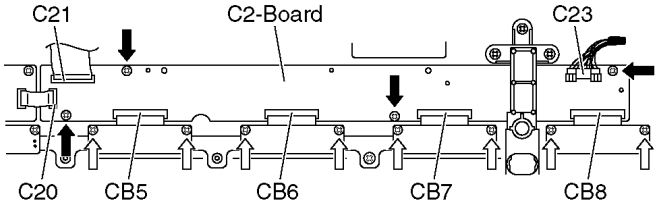


## 6.15. Remove the speaker L, R

1. Disconnect the relay connector .
2. Remove the screws (×4 ➡ each) and remove the speaker holder.
3. Remove the speaker L, R.

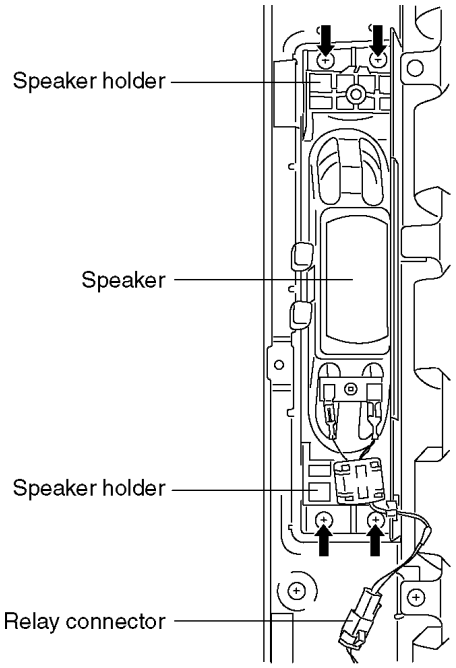


## 6.16. Remove the stand brackets

1. Remove the plasma panel section from the servicing stand and lay on a flat surface such as a table (covered) with the plasma panel surface facing downward.
2. Remove the stand brackets (left, right) fastening screws (×5 ➡ each) and remove the stand brackets (left, right).

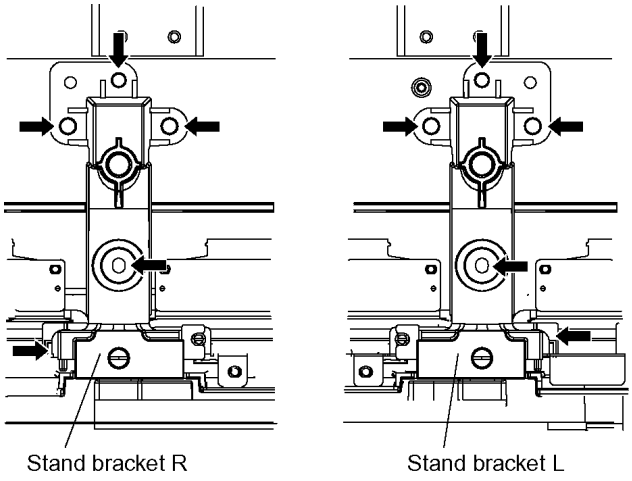


## 6.17. Remove the Plasma panel section from the Cabinet assy (glass)

1. Remove the plasma panel section from the servicing stand and lay on a fiat surface such as a table (covered) with the plasma panel surface facing downward.
2. Remove the stand brackets (left, right) fastening screws (×2 ➡ each).

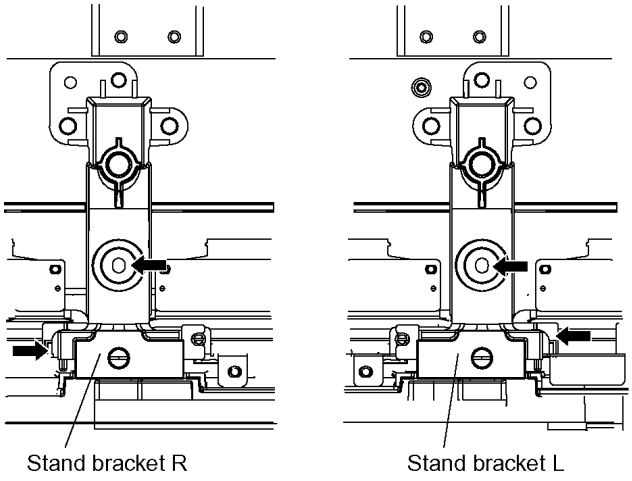


3. Replace the servicing stand and stand the set.
4. Remove the cabinet assy and the plasma panel fastening screws (×13 ➡).

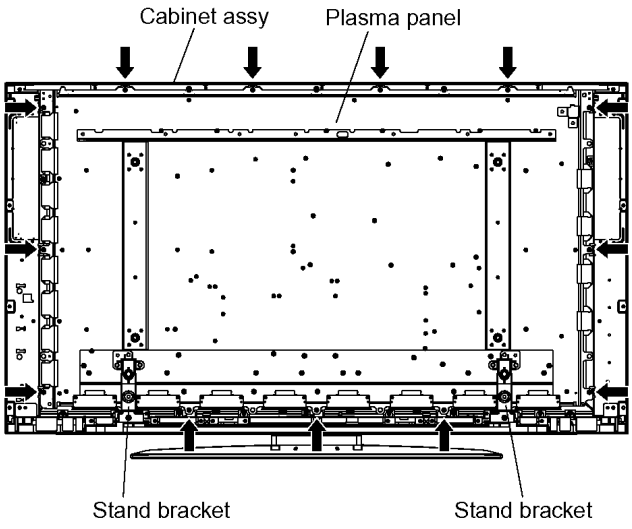


5. For leaving the plasma panel from the cabinet assy, pull the bottom of the front frame forward, lift, and remove.

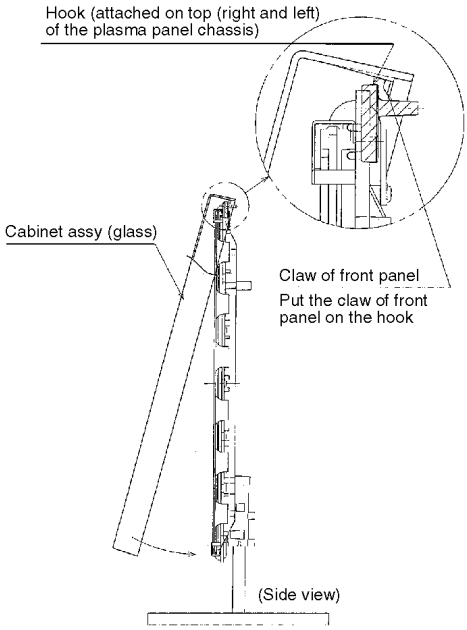


## 6.18. Remove the K-Board and the S-Board

1. Remove the cabinet assy. (See section 6.17.)
2. Remove the screws (×14 ➡) and remove the glass holder bottom.

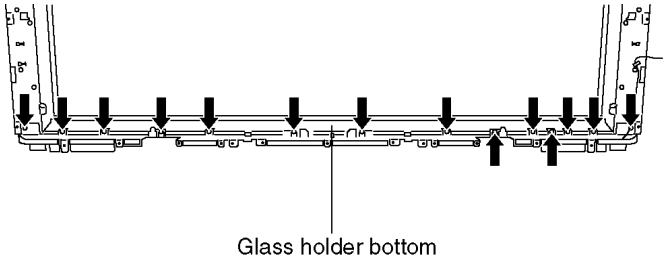


3. Unlock the cable clampers to free the cable.
4. Remove the screws (×2 ➡) and remove the front P.C.B. metal.

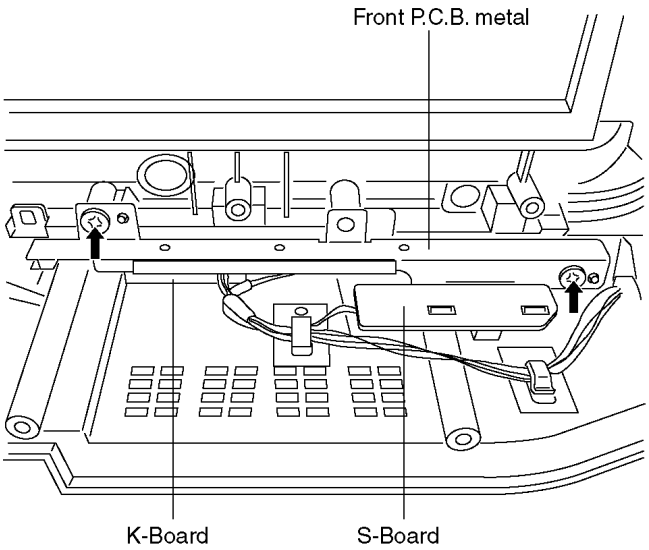


5. Remove the screws (×2 ➡).

6. Disconnect the connector (S2) and Remove the S-Board.

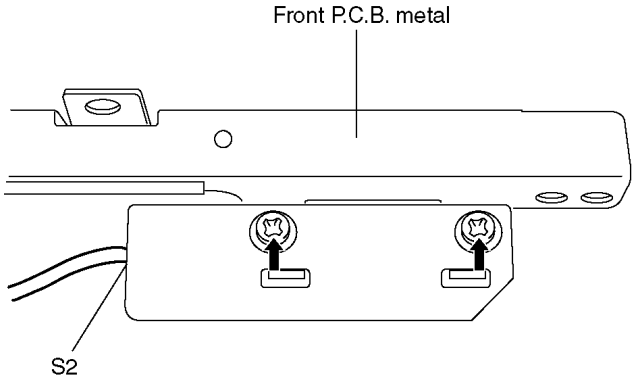


7. Remove the screws (×2 ➡ ).
8. Disconnect the connectors (K1 and K2) and remove the K-Board.

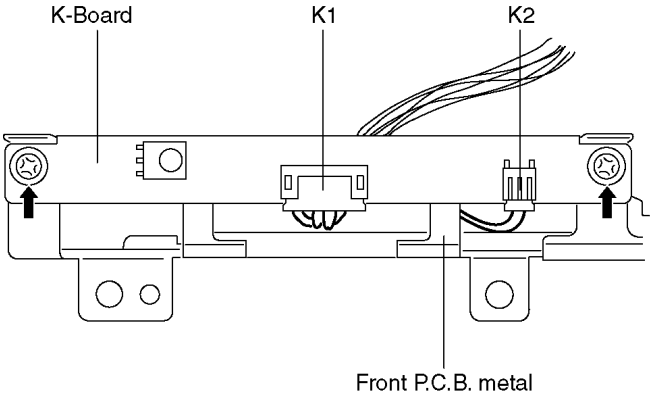


## 6.19. Replace the plasma panel (finished)

1. Place the new plasma panel (finished) on the flat surface of the table (covered by a soft cloth), with the plasma panel surface facing downward.
2. Attach the C1-Board and the C2-Board, connect the flexible cables (×16) from the Plasma panel to the C1-Board and the C2-Board, and fit the flexible cable holders.
3. Attach the Hooks (left, right) and fit the stand brackets (L, R) to the new plasma panel.
4. Place the plasma panel section on the servicing stand.
5. Attach the cabinet assy and each P.C.Board and so on, to the new plasma panel.

   ***When fitting the front frame, be careful to allow any debris, dust or handling residue to remain between the front glass and plasma panel.**

# 7 Caution statement

## 7.1. Caution statement.

**Caution:**

Please confirm that all flexible cables are assembled correctly.

Also make sure that they are locked in the connectors.

Verify by giving the flexible cables a very slight pull.

# 8 Location of Lead Wiring

## 8.1. Lead of Wiring (1)

The wire is dressed as shown in figure.

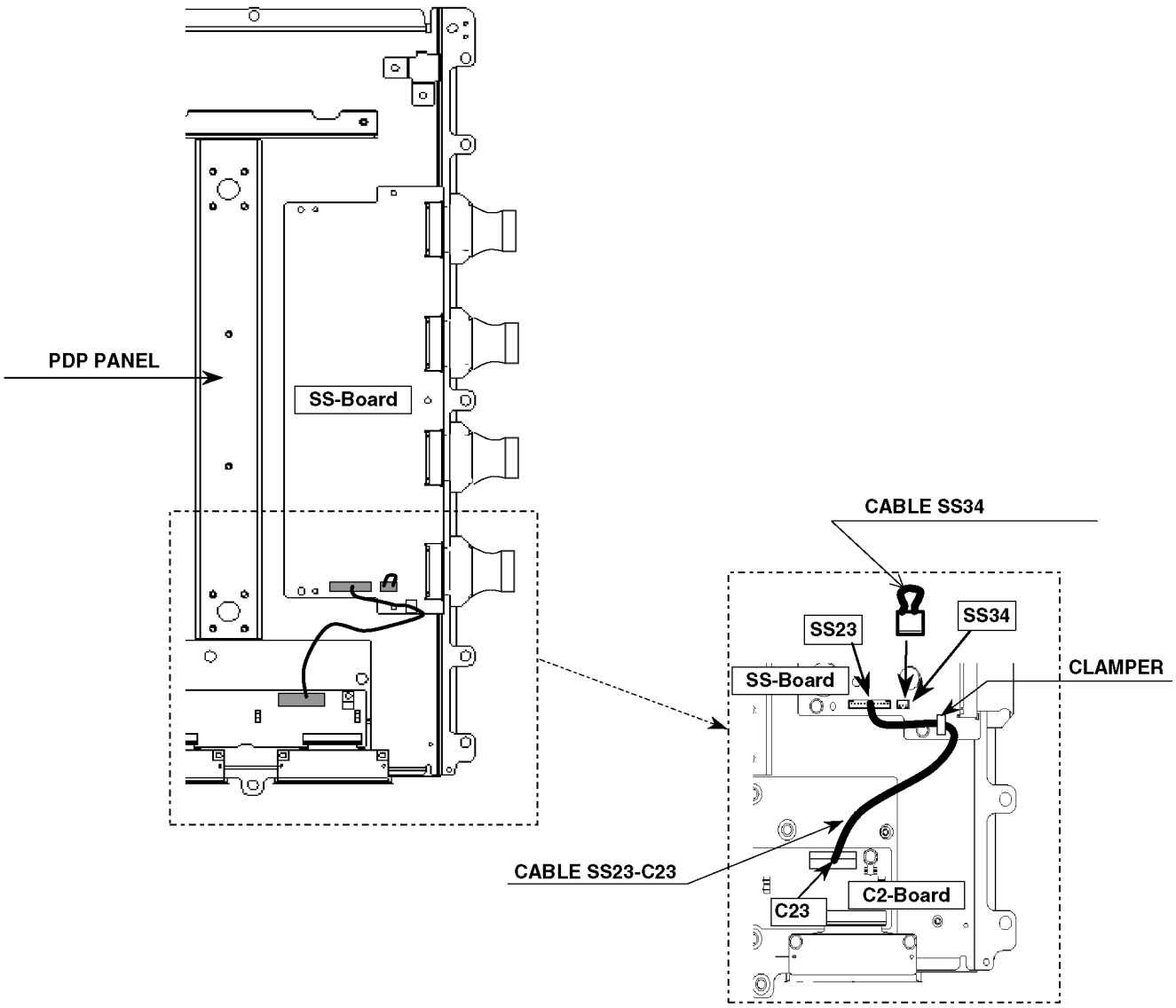

## 8.2. Lead of Wiring (2)

The wire is dressed as shown in figure.

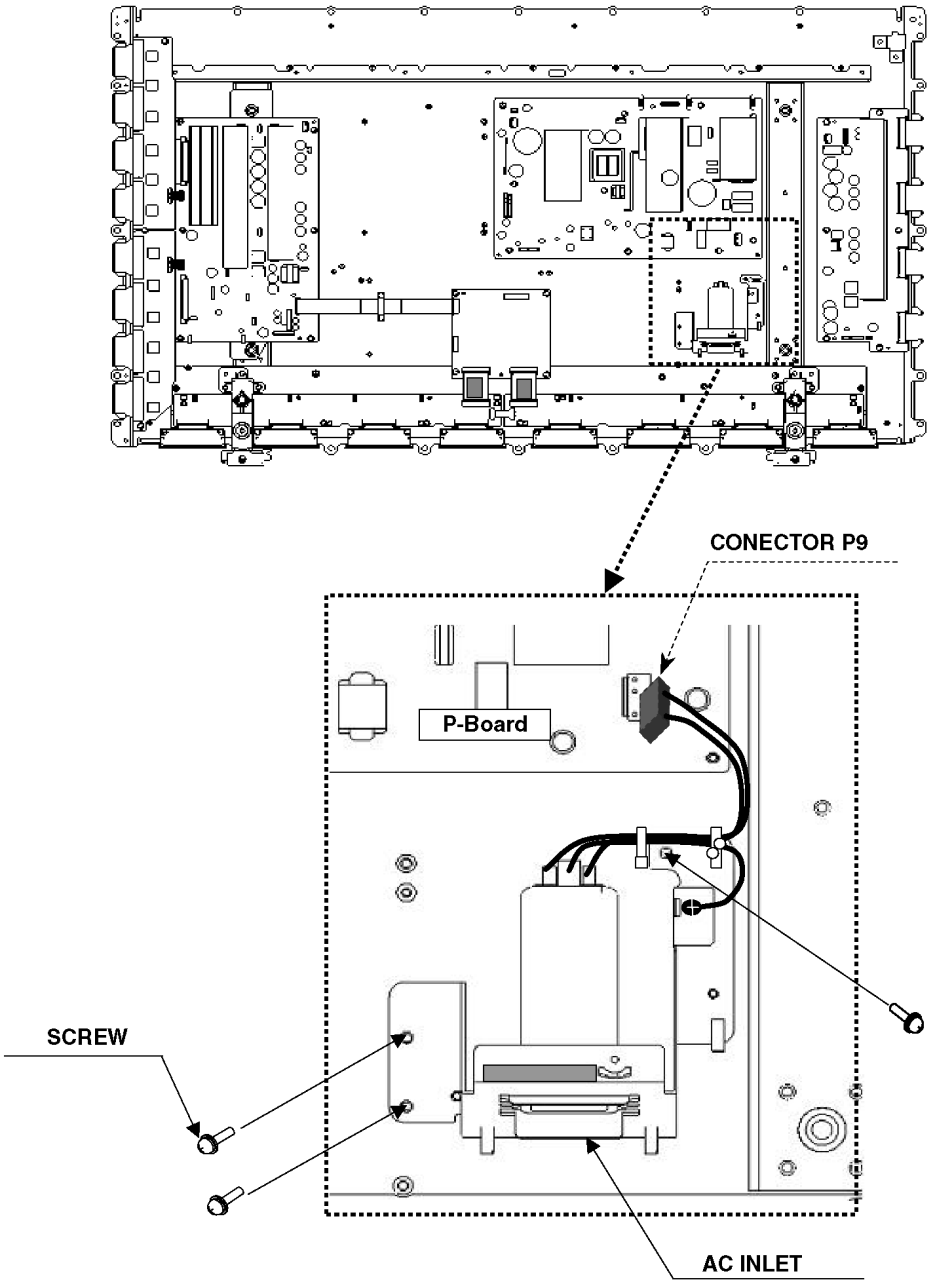

## 8.3. Lead of Wiring (3)

The wire is dressed as shown in figure.

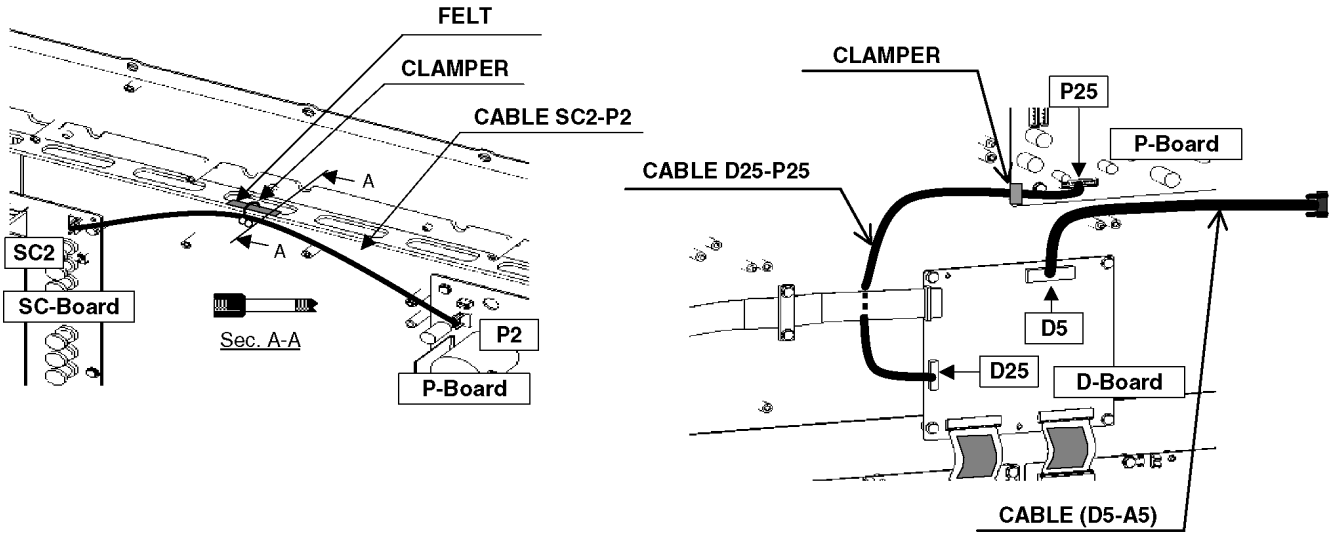


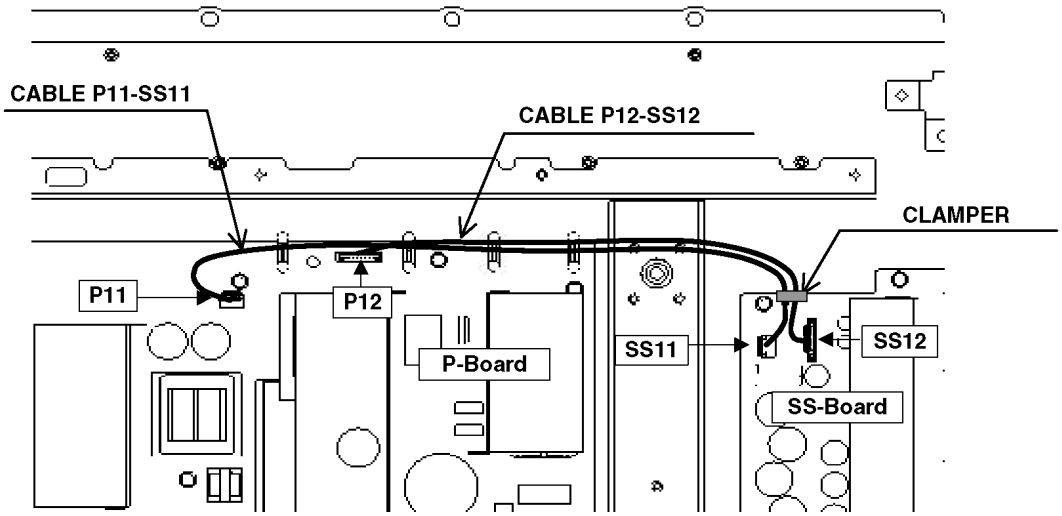

## 8.4. Lead of Wiring (4)

The wire is dressed as shown in figure.

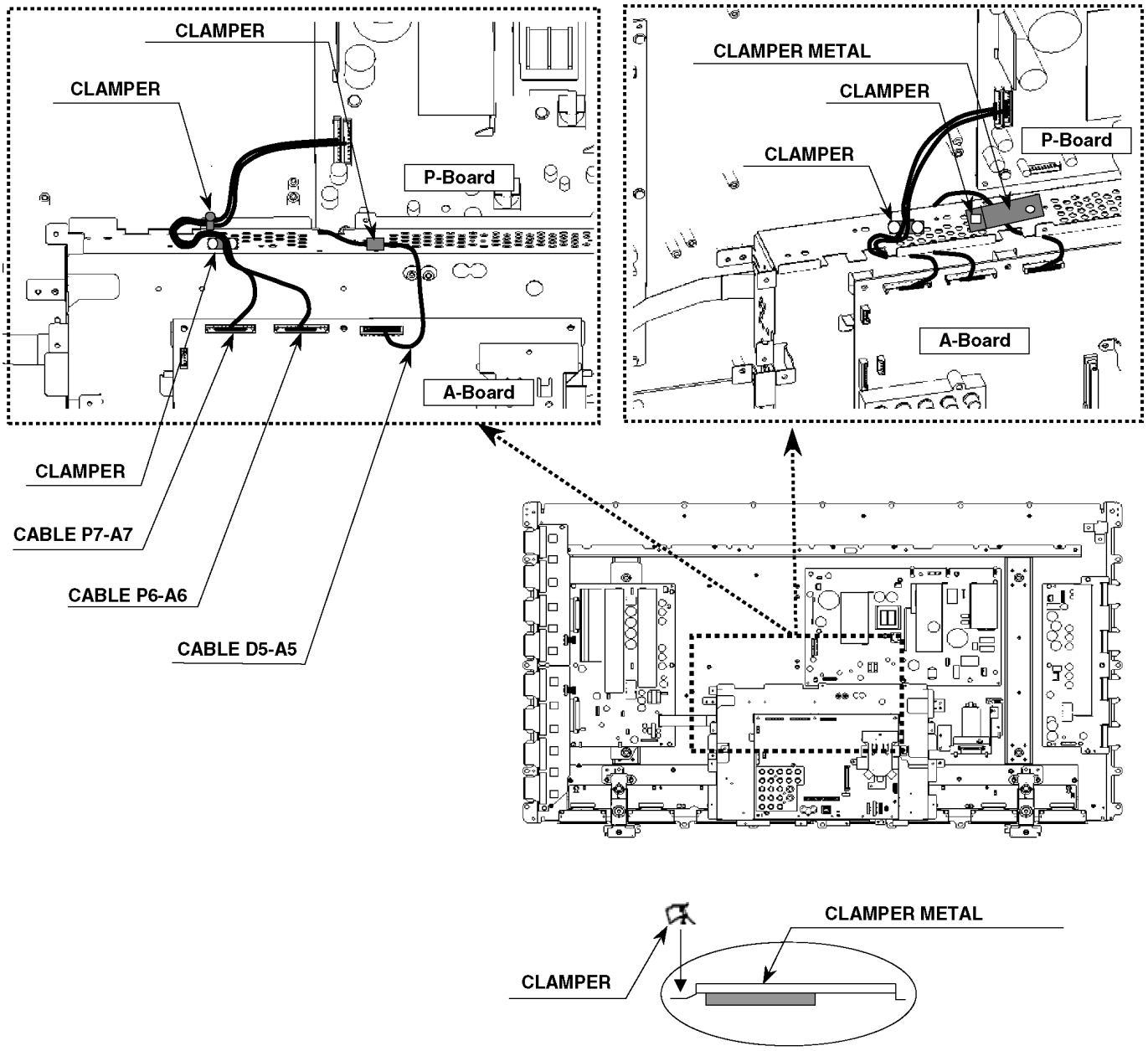

## 8.5. Lead of Wiring (5)

The wire is dressed as shown in figure.

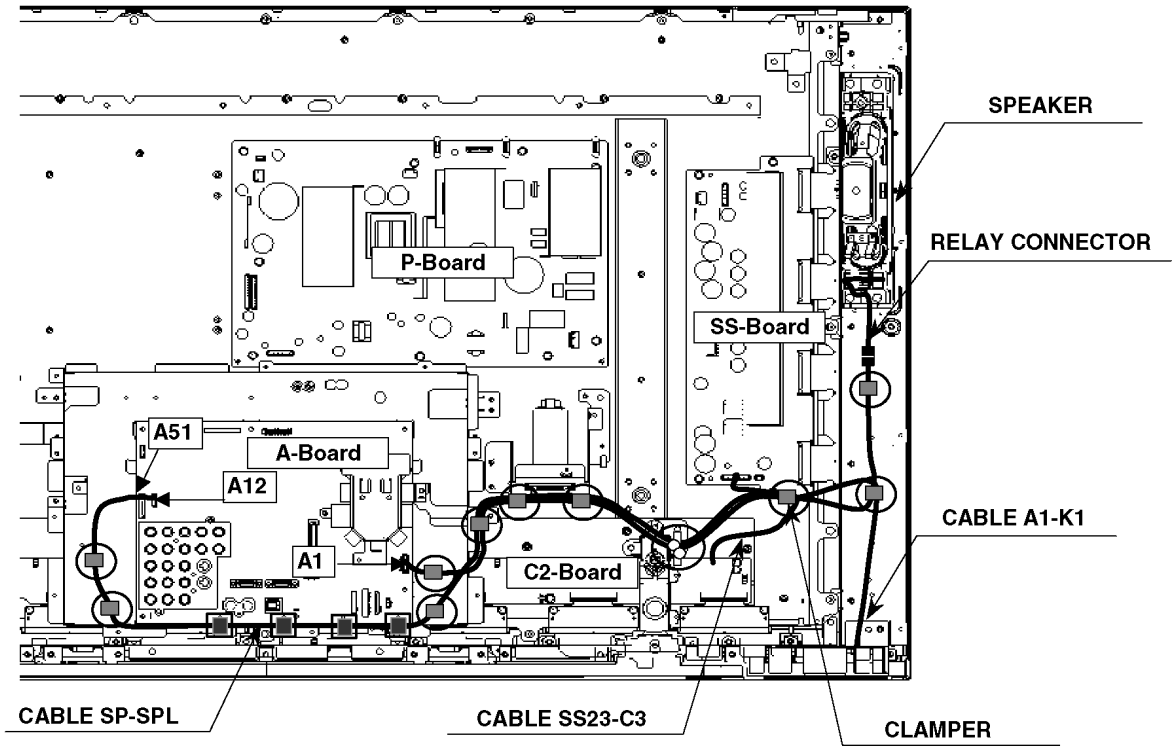


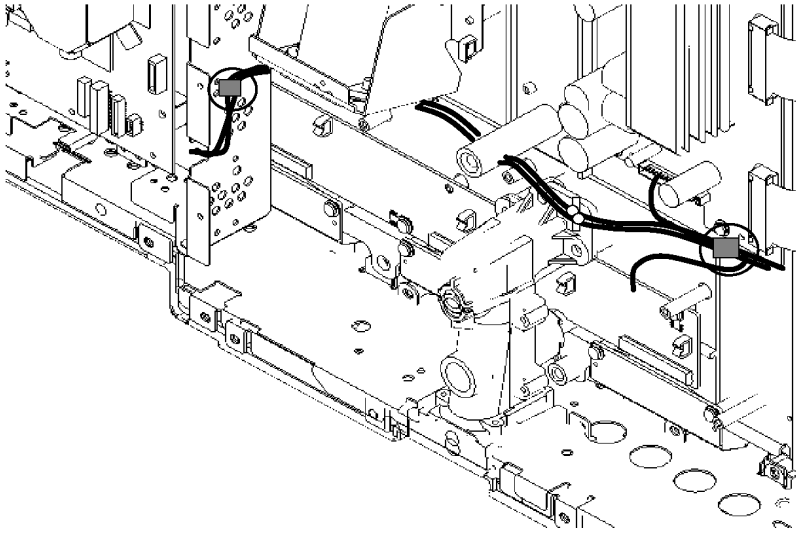

## 8.6. Lead of Wiring (6)

The wire is dressed as shown in figure.

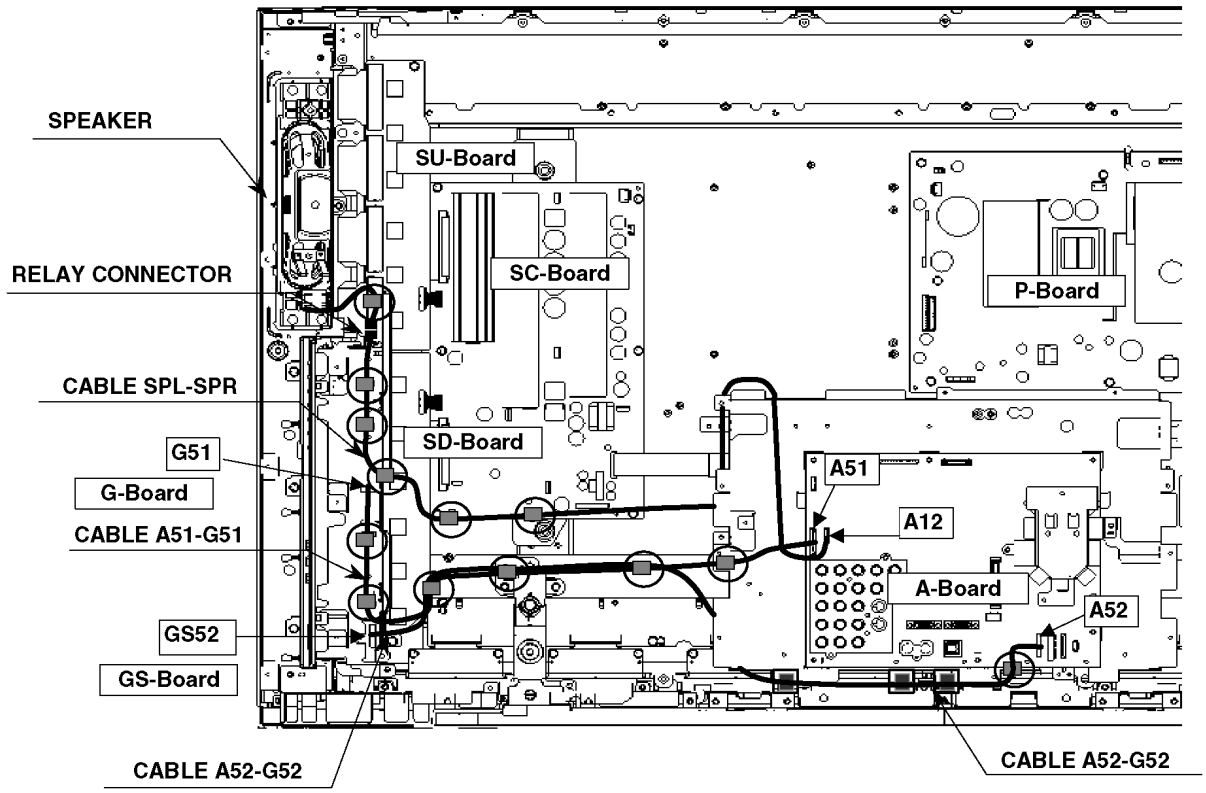


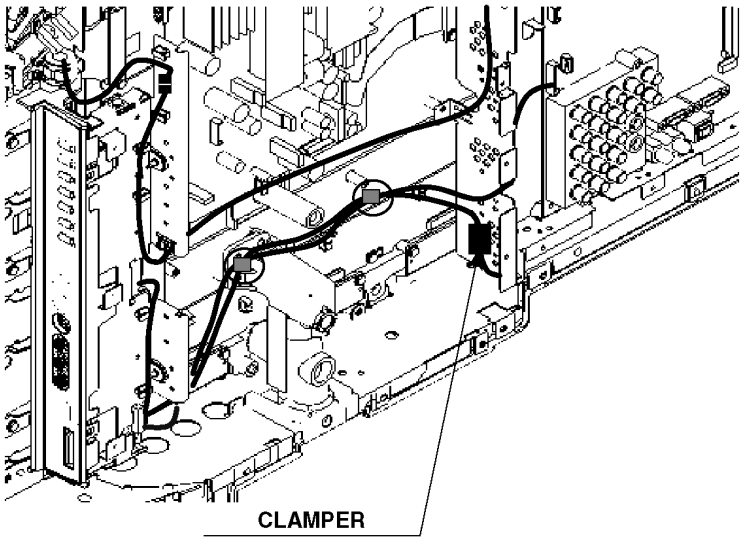

# 9 Self-check Function

Use the self-check function to test the unit.

1. Checking the IIC bus lines
2. Power LED Blinking timing

## 9.1. Check of the IIC bus lines

### 9.1.1. How to access

Self-check indication only:

Produce TV reception screen, and while pressing [VOLUME ( - )] button on the main unit, press [OK] button on the remote control for more than 3 seconds.

Self-check indication and forced to factory shipment setting:

Produce TV reception screen, and while pressing [VOLUME ( - )] button on the main unit, press [MENU] button on the remote control for more than 3 seconds.

### 9.1.2. Screen display

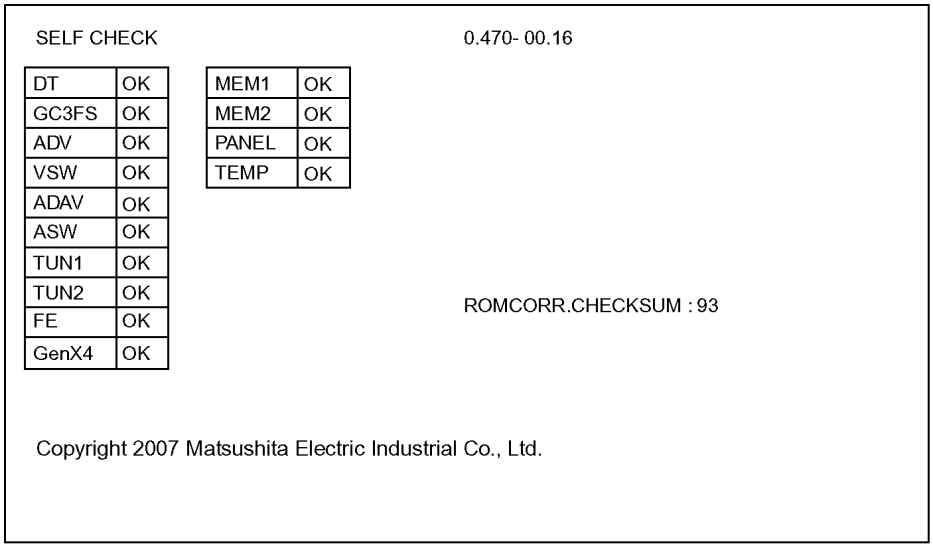


### 9.1.3. Check Point

Confirm the following parts if NG was displayed.

| DISPLAY | Ref. No. | Description | P.C.B. |
|---|---|---|---|
| DT | IC8001 | Peaks Lite2 | A-Board |
| GC3FS | - - - | not used | - - - |
| ADV | IC4510 | A/D CONV. , HDMI RX | A-Board |
| VSW | IC3001 | VIDEO SW | A-Board |
| ADAV | IC2106 | SOUND PROCESSOR | A-Board |
| ASW | IC3101 | AUDIO SW | A-Board |
| TUN1 | TU8300 | TUNER (PLL block) | A-Board |
| TUN2 | TU8300 | TUNER (MTS block) | A-Board |
| FE | IC8302 | Digital demodulator | A-Board |
| GenX4 | IC1100 | GenX4 (STB MCU) | A-Board |
| MEM1 | IC1101 | EEPROM (GenX4) | A-Board |
| MEM2 | IC8503 | EEPROM (Peaks) | A-Board |
| PANEL | IC9003 | MICON | D-Board |
| TEMP | IC4800 | TEMP SENSOR | A-Board |

### 9.1.4. Exit

Disconnect the AC cord from wall outlet.

# 9.2. Power LED Blinking timing chart

1. Subject

   Information of LED Flashing timing chart.

2. Contents

   When an abnormality has occurred the unit, the protection circuit operates and reset to the stand by mode. At this time, the defective block can be identified by the number of blinks of the Power LED on the front panel of the unit.

| Blinking Times | Blinking timing | Contents | Check point |
|---|---|---|---|
| 1 | 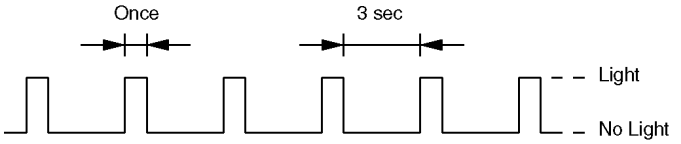 | No particular check point | - |
| | | Panel Status | - |
| | | STB 5V SENSE Time out | A-Board |
| 2 | | 15V SOS | D-Board |
| 3 | | 3.3V SOS | D-Board |
| 4 | | Power SOS | P-Board |
| 5 | 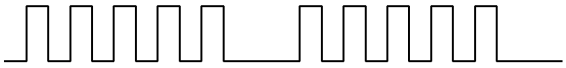 | 5V SOS | D-Board |
| 6 | 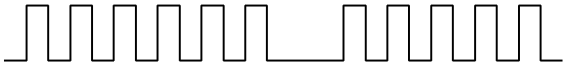 | Driver SOS1<br>(SC Energy recovery circuit) | SU-Board<br>SD-Board<br>SC-Board |
| 7 | | Driver SOS2<br>(SC floating voltage area) | SU-Board<br>SD-Board<br>SC-Board |
| 8 | | Driver SOS3<br>(SS Energy recovery circuit) | SS-Board |
| 9 | | Panel Config SOS | - |
| 10 | | Sub 5V SOS<br>Main 3.3V SOS<br>DTV 9V SOS<br>Tuner Power SOS | A-Board |
| 12 | | Sound SOS | A-Board |
| 13 | | Comunucation Error with<br>IC8001<br>(Peaks Lite 2) | A-Board |

# 9.3. No Power

First check point

There are following 2 states of No Power indication by power LED.

1. No lit
2. Red is lit then turns red blinking a few seconds later. (See 9.2.)

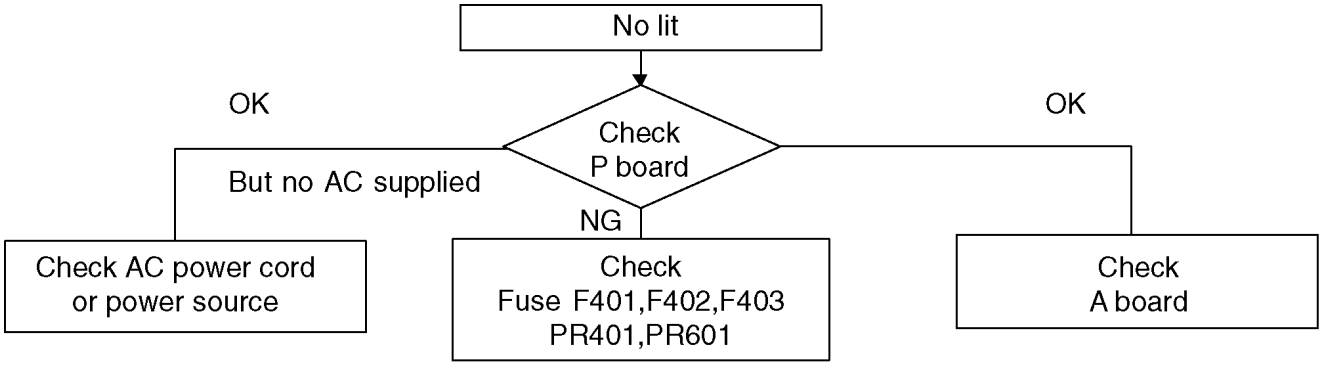

## 9.4. No Picture

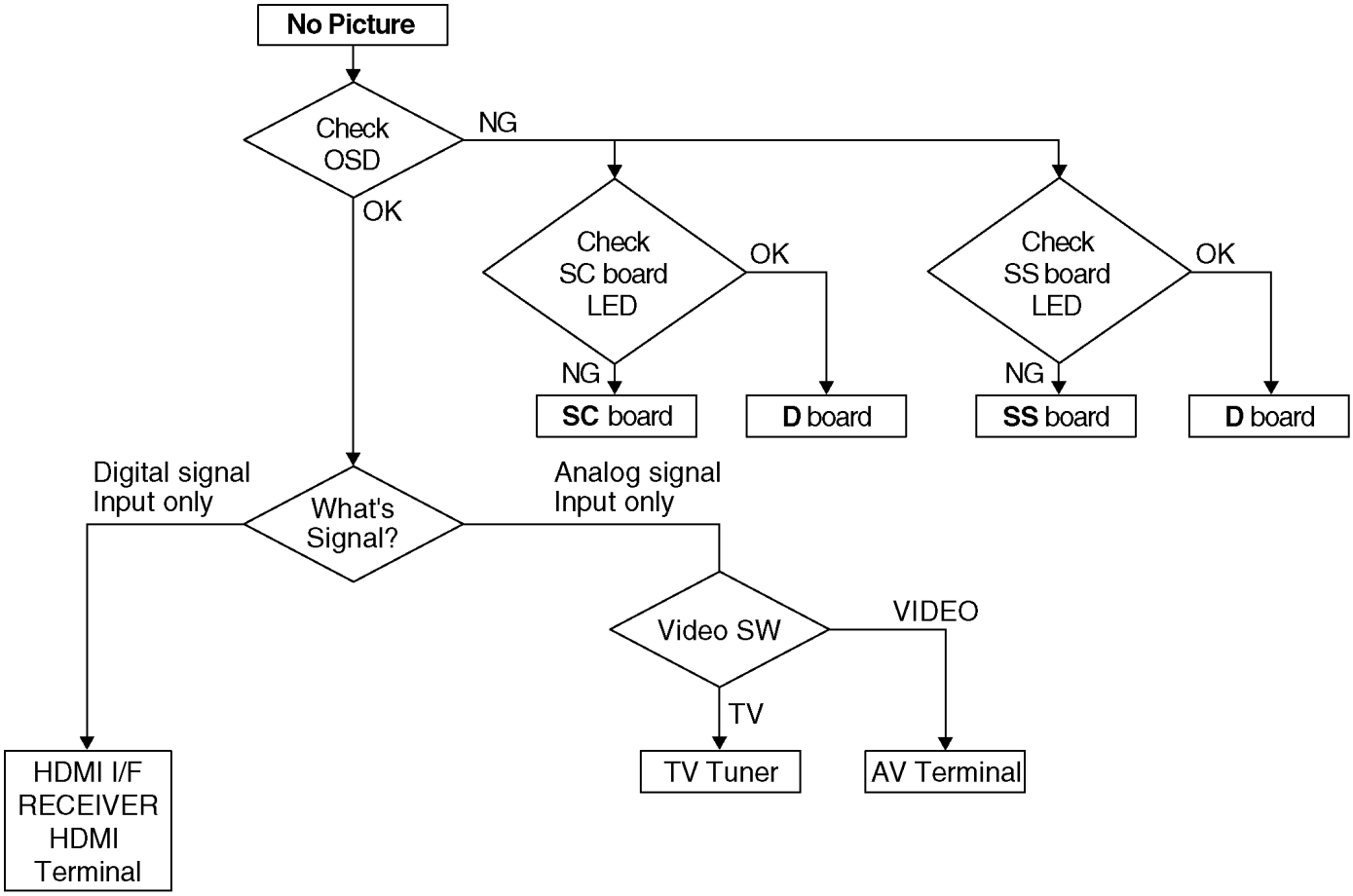


Drive circuits LED indicator

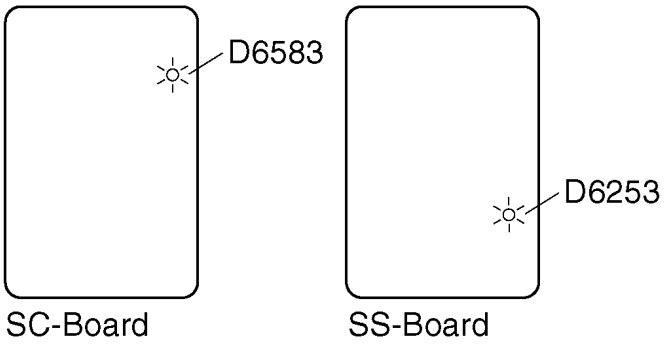

## 9.5. Local screen failure

Plasma display may have local area failure on the screen. Fig-1 is the possible defect P.C.B. for each local area.

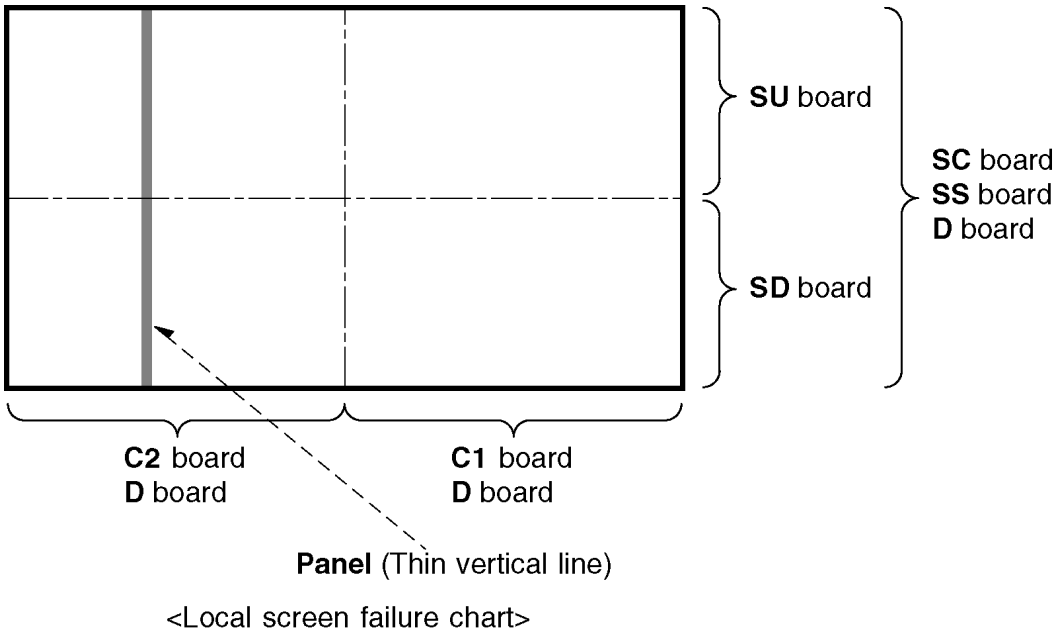


<Local screen failure chart>

Fig-1

# 10 Service Mode

## 10.1. How to enter into Service Mode

While pressing [VOLUME ( - )] button of the main unit, press [RECALL] button of the remote control three times within 3 seconds.

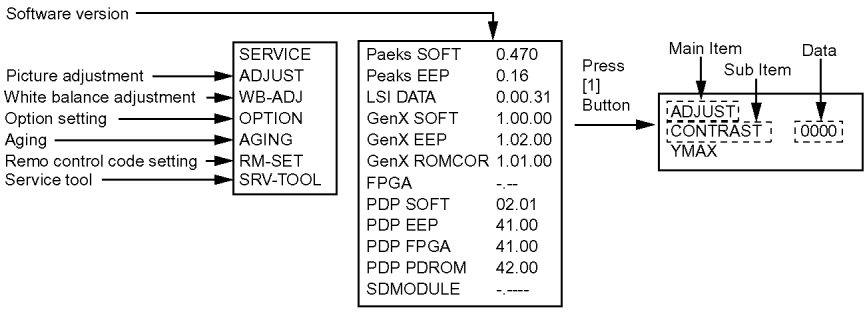


### 10.1.1. Key command

“1” button...Main items Selection in forward direction

“2” button...Main items Selection in reverse direction

“3” button...Sub items Selection in forward direction

“4” button...Sub items Selection in reverse direction

“VOL” button...Value of sub items change in forward direction ( + ), in reverse direction ( - )

## 10.1.2. Contents of adjustment mode

- Value is shown as a hexadecimal number.
- Preset value differs depending on models.
- After entering the adjustment mode, take note of the value in each item before starting adjustment.

| Main item | Sub item | Sample Data | Remark |
|---|---|---|---|
| ADJUST | CONTRAST | 000 | |
| | COLOR | 49 | |
| | TINT | FE | |
| | SUB-BRT | 808 | |
| WB-ADJ | R-CUT | 80 | |
| | G-CUT | 80 | |
| | B-CUT | 80 | |
| | R-DRV | F6 | |
| | G-DRV | E2 | |
| | B-DRV | FC | |
| | ALL-CUT | 80 | |
| | ALL-DRV | FC | |
| OPTION | BOOT | ROM | Factory Preset. |
| | STBY-SET | 00 | |
| | Emergency | OFF | |
| | CLK MODE | 00 | |
| | CLOCK | 000 | |
| AGING | RGBW | | |
| | COUNT | | |
| | ALL WHITE | | |
| | ALL RED | | |
| | ALL GREEN | | |
| | ALL BLUE | | |
| | ON/OFF | | |
| | RAMP WHITE | | |
| | RAMP RED | | |
| | RAMP GREEN | | |
| | RAMP BLUE | | |
| | 1% WINDOW | | |
| | COLOR BAR | | |
| | A-ZONE B-ZONE/4 TRIO | | |
| | SCROLL | | |
| | WHITE FLAME | | |
| RM-SET | CODE | A | Fixed. |
| SRV-TOOL | - | | See Next. |

## 10.1.3. How to exit

Switch off the power with the [POWER] button on the main unit or the [POWER] button on the remote control.

# 10.2. Service tool mode

## 10.2.1. How to access

1. Select “SRV-TOOL” in Service Mode.
2. Press [OK] button on the remote control.

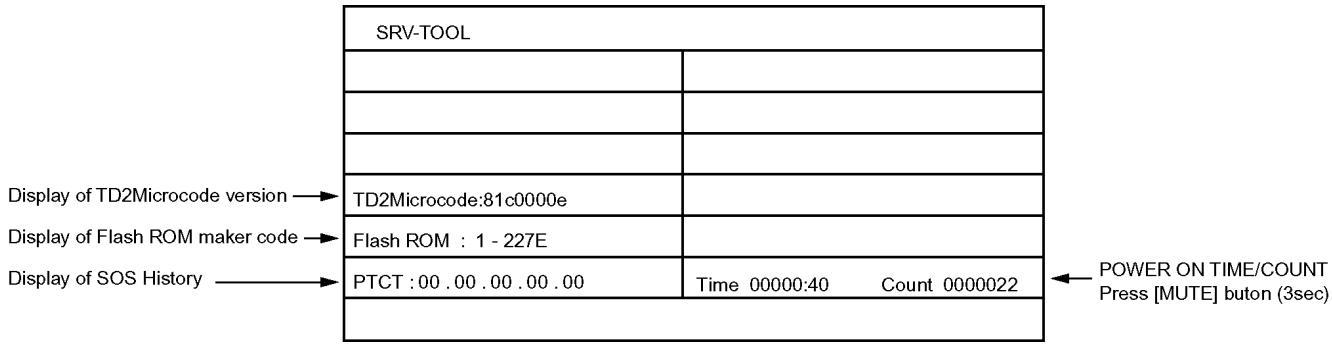


## 10.2.2. Display of SOS History

SOS History (Number of LED blinking) indication.

From left side; Last SOS, before Last, three occurrence before, 2nd occurrence after shipment, 1st occurrence after shipment.

This indication expect 2nd and 1st occurrence after shipment will be cleared by “Self-check indication and forced to factory shipment setting”.

## 10.2.3. POWER ON TIME/COUNT

Note: To display TIME/COUNT menu, highlight position, then press MUTE for (3sec).

Time : Cumulative power on time, indicated hour : minute by decimal

Count : Number of On times by decimal

Note : This indication will not be cleared by either of the self-checks or any other command.

## 10.2.4. Exit

1. Disconnect the AC cord from wall outlet.

# 11 Adjustment Procedure

## 11.1. Driver Set-up

### 11.1.1. Item / Preparation

1. Input a white signal to plasma video input.
2. Set the picture controls as follows.

   Picture menu: Vivid

   Normal: Set

   Aspect: Full

**Caution**

1. First perform Vsus adjustment.
2. Confirmation of Vscn voltage should be performed after confirmation of Vad adjustment.

   When Vad=-105V, Voltage of Vscn is 40V ±4V.

### 11.1.2. Adjustments

Adjust driver section voltages referring the panel data on the panel data label.

Check or adjust the following voltages with the multimeter.

| Name | Test Point | Voltage | Volume | Remarks |
|---|---|---|---|---|
| Vsus | TPVSUS (SS) | Vsus ± 2V | R628 (P) | * |
| Ve | TPVE (SS) | Ve ± 1V | VR6000 (SS) | * |
| Vset | TPVSET (SC) | 330V ± 7V | Fixed | |
| Vad | TPVAD (SC) | -105V ± 1V | VR6600 (SC) | |
| Vscn | TPVSCN (SC) | Vad+145V ± 4V | Fixed | |
| Vda | TPVDA (SS) | 75V ± 1V, -2V | Fixed | |
| PFC | C446(+)(-) | 396.0V±0.5V | R443 (P) | |

*See the Panel label.

Panel Label information

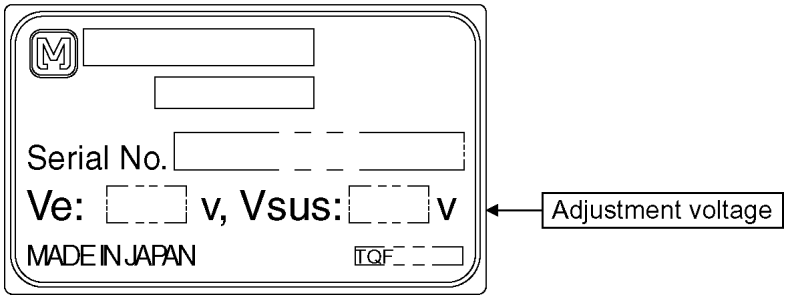

## 11.2. Initialization Pulse Adjust

1. Input the White signal to plasma video input.
2. Set the picture controls as follows.
   Picture menu : Vivid
   Normal : Set
   Aspect : Full
3. Connect Oscilloscope to TPSC1 (SC).
   Check and adjust that the stand down pulse(T2) period are each within specification.

| | Test point | Volume | Level |
|---|---|---|---|
| T2 | TPSC1 (SC) | VR6602 (SC) | 190 ± 10µ Sec |

TPSC1

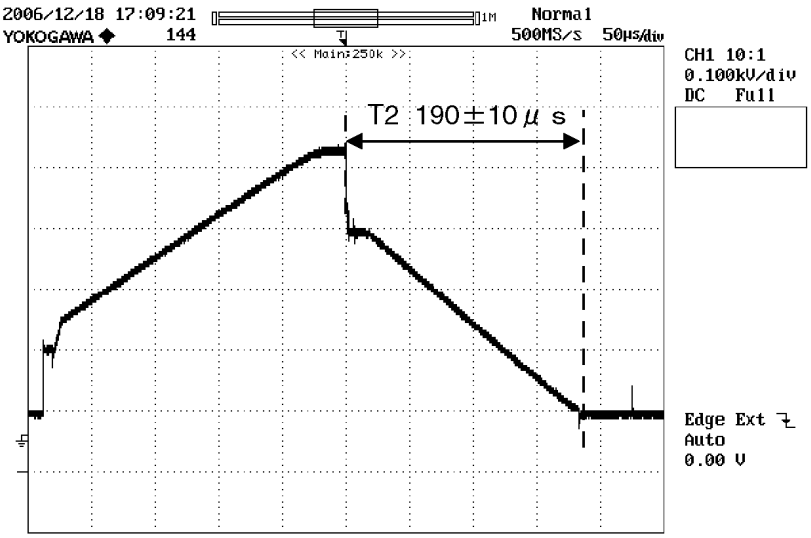


## 11.3. P.C.B. (Printed Circuit Board) exchange

### 11.3.1. Caution

1. To remove P.C.B. , wait 1 minute after power was off for discharge from electrolysis capacitors.

### 11.3.2. Quick adjustment after P.C.B. exchange

Adjust the following voltages with the multimeter.

| P.C.B. | Name | Test Point | Voltage | Volume | Remarks |
|---|---|---|---|---|---|
| P Board | Vsus | TPVSUS (SS) | Vsus ± 2V | R628 (P) | * |
| | PFC | C446 (+) (-) | 396.0V ± 0.5V | R443 (P) | |
| SC Board | Vad | TPVAD (SC) | -105V ± 1V | VR6600 (SC) | |
| SS Board | Ve | TPVE (SS) | Ve ± 1V | VR6000 (SS) | * |
| D, DG Board | White balance and Sub brightness for NTSC, PAL, HD, PC and 625i signals | | | | |

*See the Panel label.

**Caution:**

Absolutely do not reduce Vsus below Ve not to damage the P.C.B.

## 11.4. Adjustment Volume Location

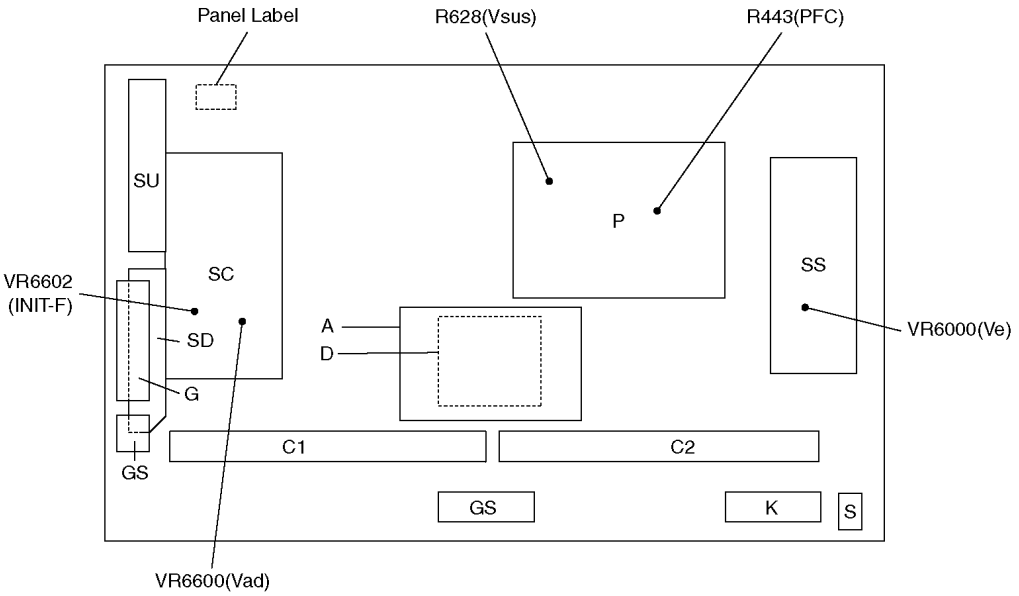


## 11.5. Test Point Location

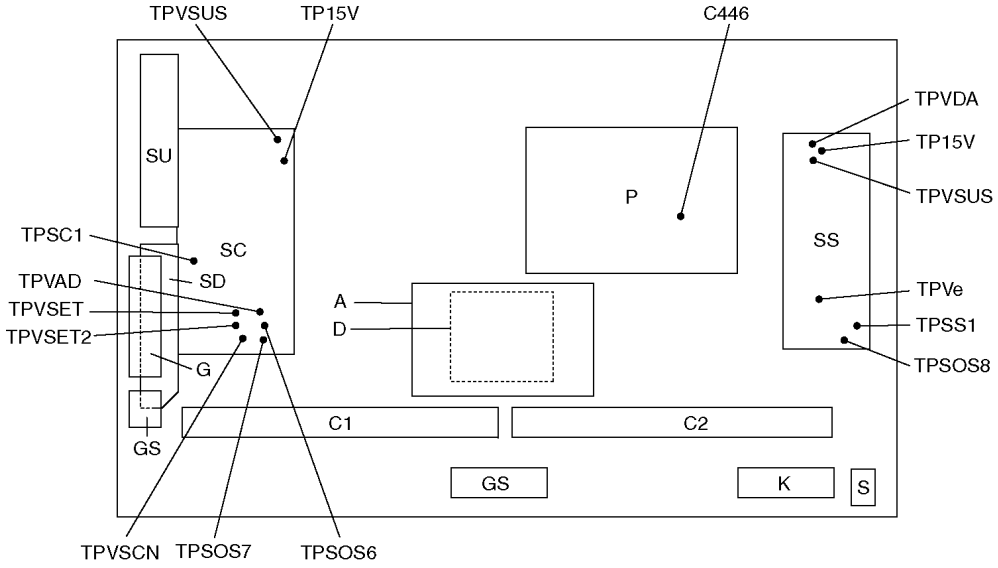

# 12 Adjustment

## 12.1. White balance adjustment

| Name of measuring instrument | Connection | Remarks |
|---|---|---|
| • W/B pattern<br>• Color analyzer<br>(Minolta CA-100 or equivalent) | Component input<br>Panel surface | |

| Procedure | Remarks |
|---|---|
| • Ensure aging is adequate.<br>• Make sure the front panel to be used on the final set is fitted.<br>• Make sure a color signal is not being shown before adjustment.<br>• Put the color analyzer where there is little color variation.<br><br>1. Output a white balance pattern.<br>2. Check that the color temperature is “Cool”.<br>3. Set to serviceman mode, WB-ADJ.<br>4. Set “R-CUT” “G-CUT” “B-CUT” the values written in table 1.<br>5. Attach the sensor of color analyzer to he center of highlight window.<br>6. Fix G drive at C0h and adjust “B-DRV” and “R-DRV” so x, y value of color analyzer become the “Color temperature High” in table 2.<br>7. Increase RGB together so the maximum drive value in RGB becomes FCh. That is, set “ALL DRIVE” to FCh.<br>8. Set color temperature to “Normal”.<br>9. Set “R-CUT” “G-CUT” “B-CUT” the values written in table 1.<br>10. Attach the sensor of color analyzer to the center of highlight window.<br>11. Fix G drive at C0h and adjust “B-DRV” and “R-DRV” so x, y value of color analyzer become the “Color temperature Mid” in table 2.<br>12. Increase RGB together so the maximum drive value in RGB becomes FCh. That is, set “ALL DRIVE” to FCh.<br>13. Set color temperature to “Warm”.<br>14. Set “R-CUT” “G-CUT” “B-CUT” the values written in table 1.<br>15. Attach the sensor of color analyzer to the center of highlight window.<br>16. Fix G drive at C0h and adjust “B-DRV” and “R-DRV” so x, y value of color analyzer become the “Color temperature Low” in table 2.<br>17. Increase RGB together so the maximum drive value in RGB becomes FCh. That is, set “ALL DRIVE” to FCh.<br>18. Set color temperature to “Cool”.<br><br>[ adjustment of “Normal” “Warm” by data shift from “Cool” adjust. ]<br>For “Normal” “Warm” adjustment, set values that the adjusted value of “Cool” plus the figures wrote below.<br><br>19. Copy values adjusted by HD pattern to the NTSC data area of EEPROM.<br><br>Normal : R-DRV : 0h G-DRV : -2h B-DRV : -22h<br>Warm : R-DRV : 0h G-DRV : -Ah B-DRV : -62h | |

Table 1: R-CUT,G-CUT,B-CUT setting data

| Color temperature | R-CUT | G-CUT | B-CUT |
|---|---|---|---|
| High(Cool) | 80 | 80 | 80 |
| Mid | 80 | 80 | 80 |
| Low(Warm) | 80 | 80 | 80 |

Table 2: W/B adjustment values

| Color temperature | x | y |
|---|---|---|
| High(Cool) | 0.276 | 0.276 |
| Mid | 0.288 | 0.296 |
| Low(Warm) | 0.313 | 0.329 |

Table 3: EEPROM data addresses

| | | |
|---|---|---|
| SD/ Color temperature High | R-CUTOFF | 0240 |
| | G-CUTOFF | 0241 |
| | B-CUTOFF | 0242 |
| | R-DRIVE | 0243 |
| | G-DRIVE | 0244 |
| | B-DRIVE | 0245 |
| SD/ Color temperature Mid | R-CUTOFF | 0246 |
| | G-CUTOFF | 0247 |
| | B-CUTOFF | 0248 |
| | R-DRIVE | 0249 |
| | G-DRIVE | 024A |
| | B-DRIVE | 024B |
| SD/ Color temperature Low | R-CUTOFF | 024C |
| | G-CUTOFF | 024D |
| | B-CUTOFF | 024E |
| | R-DRIVE | 024F |
| | G-DRIVE | 0250 |
| | B-DRIVE | 0251 |
| HD/ Color temperature High | R-CUTOFF | 0252 |
| | G-CUTOFF | 0253 |
| | B-CUTOFF | 0254 |
| | R-DRIVE | 0255 |
| | G-DRIVE | 0256 |
| | B-DRIVE | 0257 |
| HD/ Color temperature Mid | R-CUTOFF | 0258 |
| | G-CUTOFF | 0259 |
| | B-CUTOFF | 025A |
| | R-DRIVE | 025B |
| | G-DRIVE | 025C |
| | B-DRIVE | 025D |
| HD/ Color temperature Low | R-CUTOFF | 025E |
| | G-CUTOFF | 025F |
| | B-CUTOFF | 0260 |
| | R-DRIVE | 0261 |
| | G-DRIVE | 0262 |
| | B-DRIVE | 0263 |

# 13 Hotel mode

1. Purpose

   Restrict a function for hotels.

2. Access command to the Hotel mode setup menu

   In order to display the Hotel mode setup menu, please enter the following command **(within 2 second)**.

   [TV] : Vol. “Down” + [REMOTE] : TV/VIDEO (3 times)

   Then, the Hotel mode setup menu is displayed.

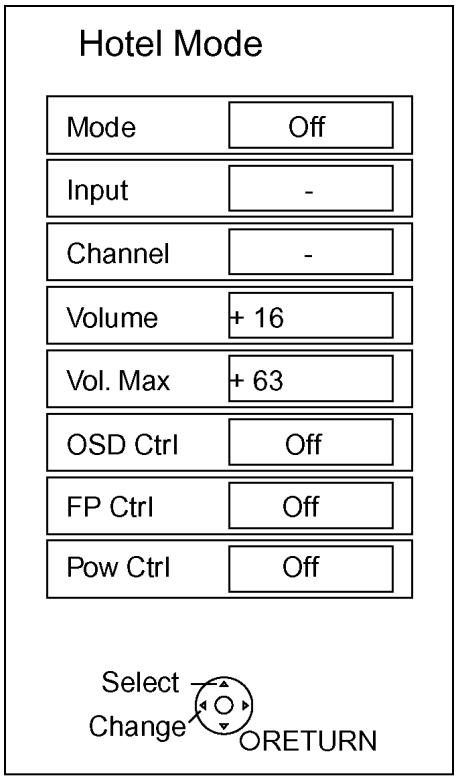


3. To exit the Hotel mode setup menu

   Disconnect AC power cord from wall outlet.

4. Explain the Hotel mode setup menu

| item | Function |
|---|---|
| Mode | Select hotel mode ON/OFF |
| Input | Select input signal modes.<br>Set the input, when each time power is switched on.<br>Selection:<br>-/RF/COMP1/COMP2/HDMI1/HDMI2/ VIDEO1/VIDEO2/VIDEO3<br>● Off: give priority to a last memory. |
| Channel | Select channel when input signal is RF.<br>Set the channel, each time power is switched on.<br>Selection:<br>Any channel number or “-”.<br>“-” means the channel when turns off. |
| Volume | Adjust the volume when each time power is switched on.<br>Range:<br>0 to 63 |
| Vol. Max | Adjust maximum volume.<br>Range:<br>0 to 63 |
| OSD Ctrl | Restrict the OSD.<br>Selection:<br>OFF/PATTERN1<br>● OFF: No restriction<br>● PATTERN1: restriction |
| FP Ctrl | Select front key conditions.<br>Selection:<br>Off/Pattern1/All<br>● Off: altogether valid.<br>● Pattern: only input key is valid.<br>● All: altogether invalid. |
| Pow Ctrl | Select POWER-ON/OFF condition when AC power cord is disconnected and then connected.<br>OFF: The same condition when AC power cord is disconnected.<br>ON: Forced power ON condition. |

NOTE

# 14 Conductor Views

## 14.1. P-Board

**P-BOARD (FOIL SIDE)**
**TXN/P1HNTUS**

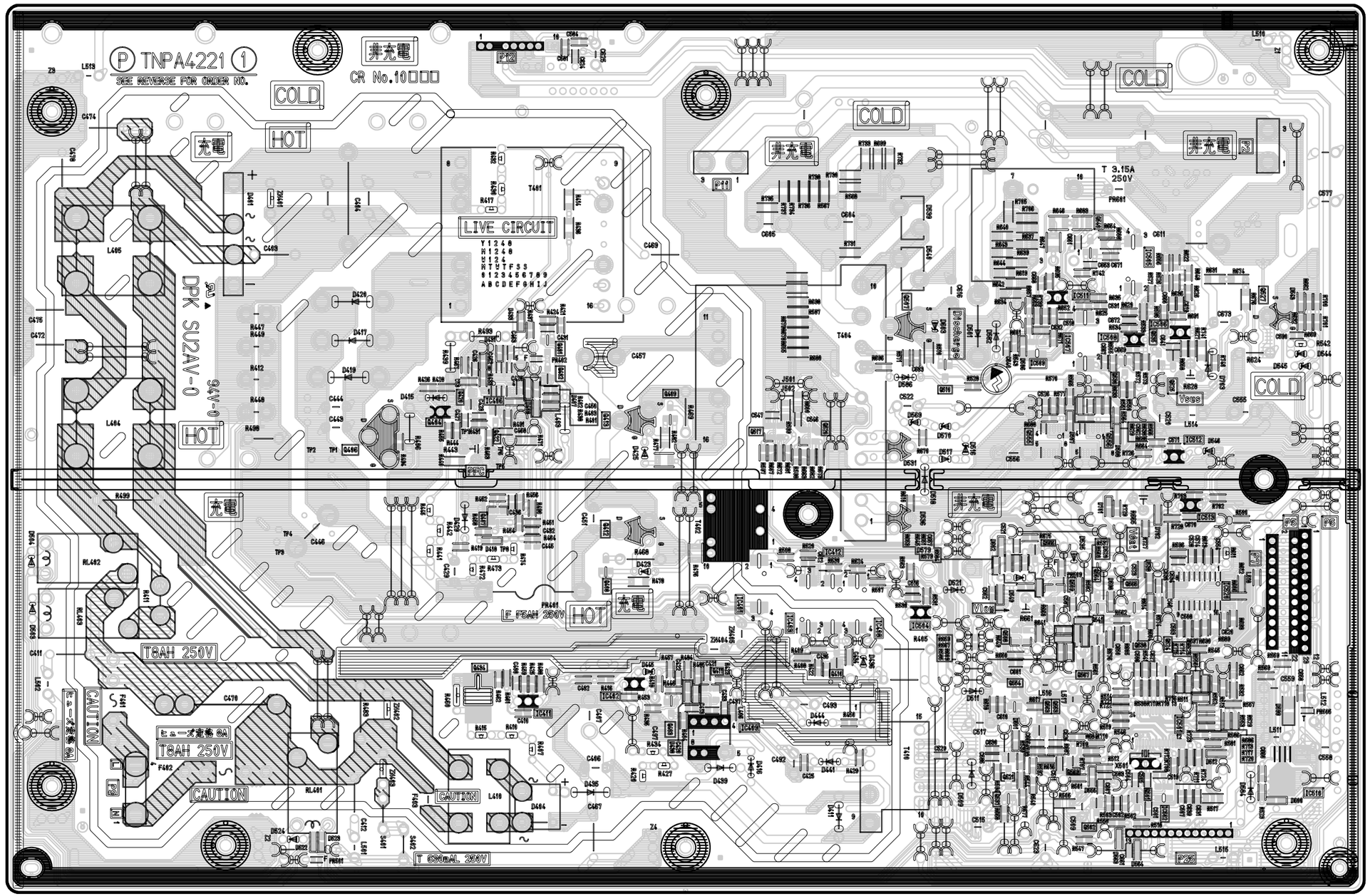


TH-42PX77U/PE77U
P-BOARD TXN/P1HNTUS

TH-42PX77U/PE77U
P-BOARD TXN/P1HNTUS

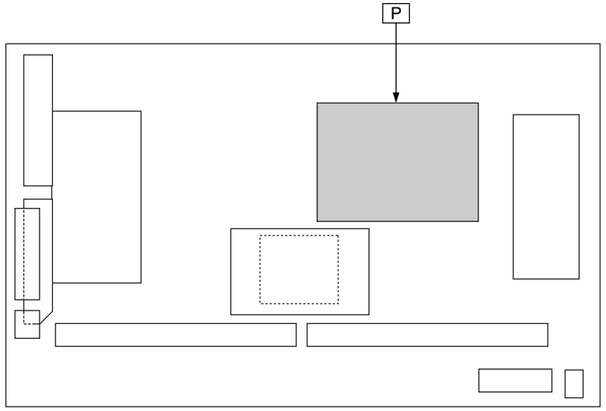


## Parts Location

| P-BOARD (FOIL SIDE) | | | | | |
|---|---|---|---|---|---|
| **IC** | | **TRANSISTOR** | | Q535 | H-4 |
| IC401 | E-2 | Q401 | D-4 | Q537 | G-1 |
| IC402 | E-2 | Q402 | D-4 | Q538 | H-2 |
| IC403 | F-2 | Q403 | E-2 | Q540 | G-5 |
| IC406 | D-4 | Q404 | D-4 | Q541 | G-2 |
| IC408 | F-2 | Q406 | C-3 | Q553 | G-2 |
| IC409 | E-2 | Q407 | D-3 | Q554 | G-2 |
| IC411 | D-2 | Q408 | E-3 | Q555 | G-3 |
| IC412 | F-3 | Q409 | E-4 | Q556 | G-3 |
| IC501 | H-2 | Q410 | F-2 | Q563 | G-2 |
| IC502 | H-1 | Q411 | E-2 | Q564 | G-3 |
| IC504 | F-2 | Q412 | E-3 | Q565 | H-3 |
| IC505 | H-5 | Q413 | E-4 | Q566 | G-3 |
| IC506 | H-4 | Q420 | D-4 | Q567 | G-2 |
| IC507 | G-4 | Q422 | D-3 | Q569 | G-2 |
| IC508 | H-4 | Q434 | D-2 | **VOLUME** | |
| IC509 | G-4 | Q501 | H-1 | R443 | C-3 |
| IC510 | I-1 | Q502 | G-1 | R661 | G-2 |
| IC511 | G-4 | Q507 | F-4 | R665 | H-3 |
| IC512 | H-3 | Q508 | G-2 | | |
| IC513 | H-3 | Q509 | G-3 | | |
| IC520 | H-3 | Q510 | G-4 | | |
| | | Q517 | E-4 | | |
| | | Q520 | F-4 | | |
| | | Q521 | G-1 | | |
| | | Q524 | H-2 | | |
| | | Q525 | H-4 | | |
| | | Q527 | H-4 | | |
| | | Q530 | H-4 | | |



## Parts Location

| P-BOARD (COMPONENT SIDE) | | | | | |
|---|---|---|---|---|---|
| **IC** | | **TRANSITOR** | | **VOLUME** | |
| IC402 | E-2 | Q404 | F-3 | R443 | F-3 |
| IC409 | E-2 | Q406 | G-3 | R661 | C-2 |
| IC411 | F-2 | Q412 | E-3 | R665 | B-3 |
| IC504 | D-2 | Q413 | E-4 | | |
| IC506 | B-4 | Q507 | D-4 | | |
| IC508 | B-4 | Q527 | A-4 | | |
| IC511 | C-4 | | | | |
| IC512 | B-3 | | | | |
| IC513 | B-3 | | | | |

## P-BOARD (COMPONENT SIDE)
## TXN/P1HNTUS

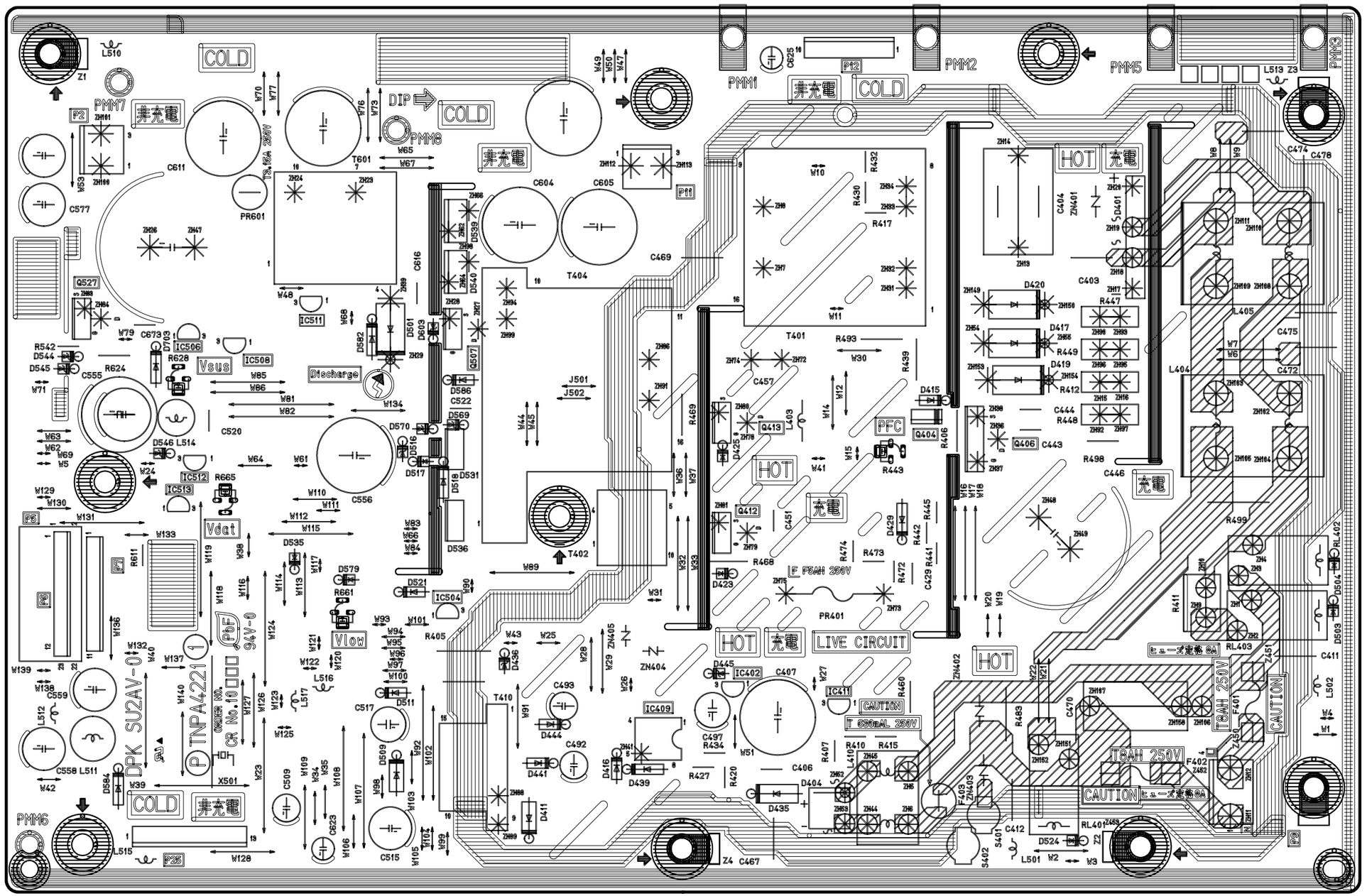


TH-42PX77U/PE77U
P-BOARD TXN/P1HNTUS

TH-42PX77U/PE77U
P-BOARD TXN/P1HNTUS

## 14.2. G, GS, K and S-Board

### K-BOARD (FOIL SIDE)
### TNPA4307S

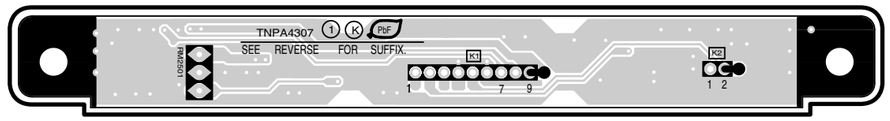


### K-BOARD (COMPONENT SIDE)
### TNPA4307S

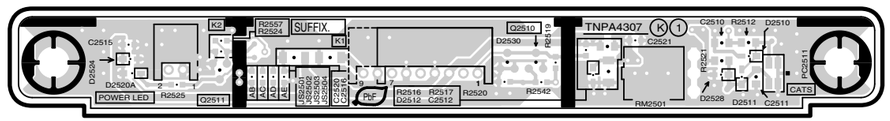


### S-BOARD (FOIL SIDE)
### TNPA4237S

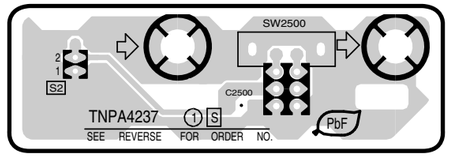


### S-BOARD (COMPONENT SIDE)
### TNPA4237S

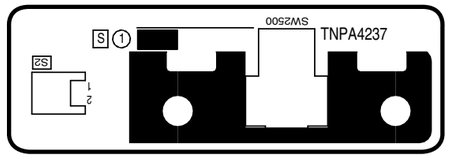


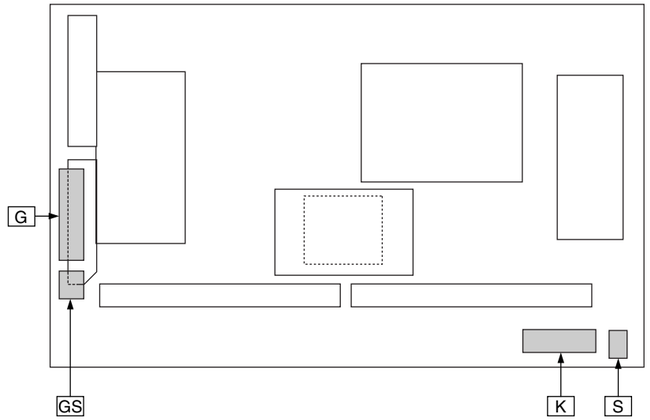


### G-BOARD (FOIL SIDE)
### TNPA4306S

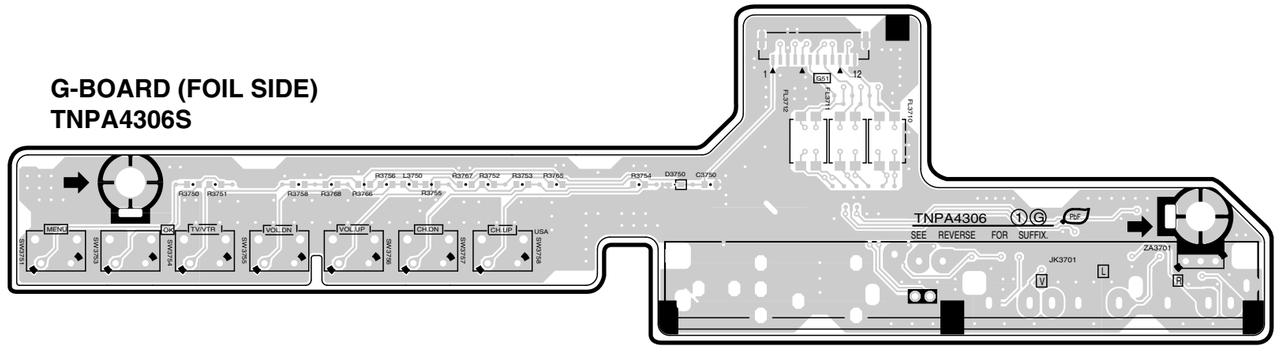


### G-BOARD (COMPONENT SIDE)
### TNPA4306S

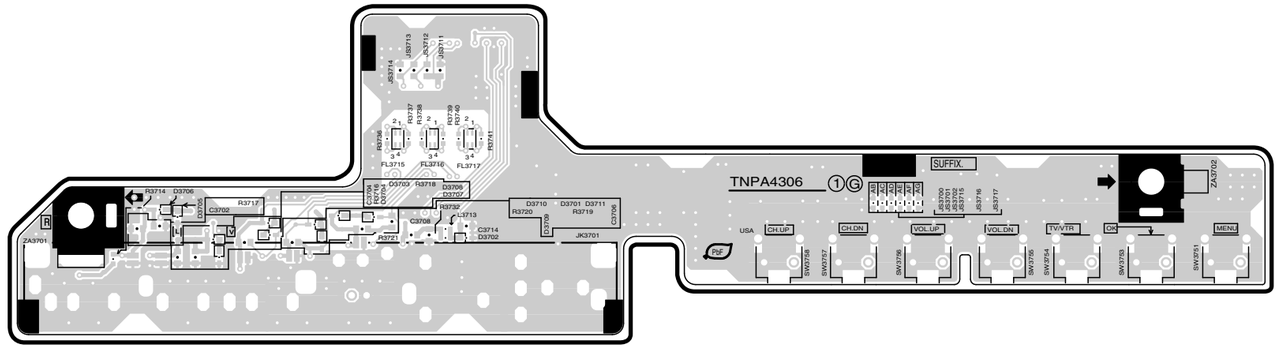


### GS-BOARD (FOIL SIDE)
### TNPA4308S

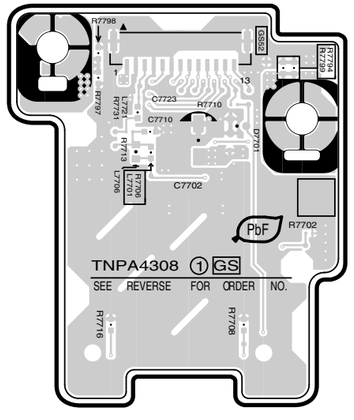


### GS-BOARD (COMPONENT SIDE)
### TNPA4308S

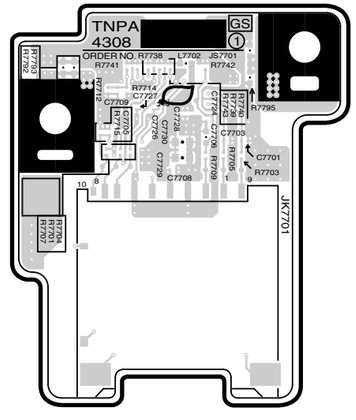


TH-42PX77U/PE77U
G-BOARD TNPA4306S GS-BOARD TNPA4308S
K-BOARD TNPA4307S S-BOARD TNPA4237S

TH-42PX77U/PE77U
G-BOARD TNPA4306S GS-BOARD TNPA4308S
K-BOARD TNPA4307S S-BOARD TNPA4237S

## 14.3. A-Board

**A-BOARD (FOIL SIDE)**
**TNPH0692AES**

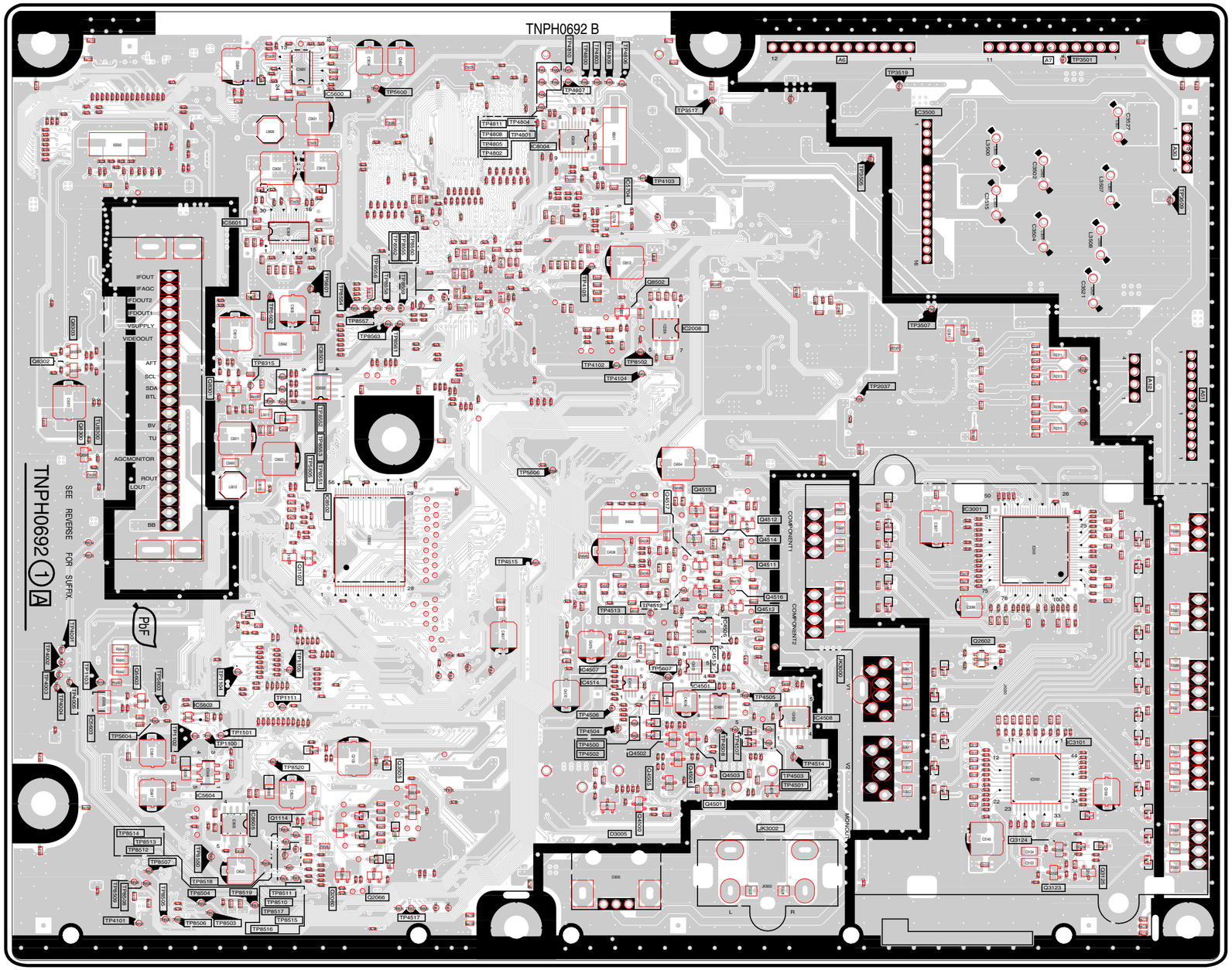


TH-42PX77U/PE77U
A-BOARD TNPH0692AES

TH-42PX77U/PE77U
A-BOARD TNPH0692AES

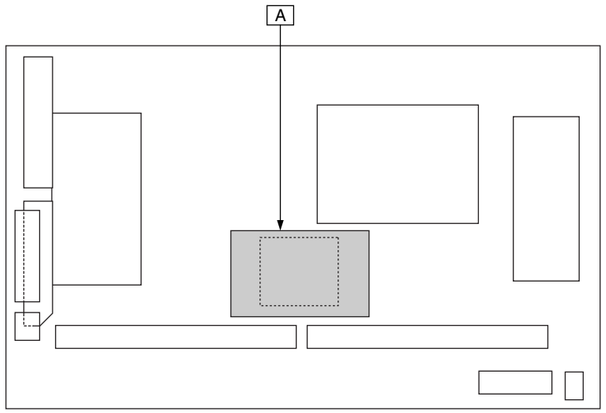


## Parts Location

**A-BOARD (FOIL SIDE)**

| IC | | TRANSISTOR | | TP | | TP4512 | E-3 | TP8511 | C-1 |
|---|---|---|---|---|---|---|---|---|---|
| IC2008 | E-4 | Q1107 | C-3 | TP1100 | C-2 | TP4513 | E-3 | TP8512 | B-1 |
| IC3001 | G-3 | Q1114 | C-2 | TP1101 | C-2 | TP4514 | F-2 | TP8513 | B-2 |
| IC3101 | G-2 | Q2060 | C-1 | TP1102 | B-2 | TP4515 | D-3 | TP8514 | B-2 |
| IC4501 | E-2 | Q2066 | C-1 | TP1103 | B-2 | TP4517 | D-1 | TP8515 | C-1 |
| IC4506 | E-3 | Q2602 | G-3 | TP1104 | C-2 | TP4800 | E-6 | TP8516 | C-1 |
| IC4507 | E-2 | Q3123 | G-1 | TP1105 | C-2 | TP4801 | D-5 | TP8517 | C-1 |
| IC4508 | F-2 | Q3124 | G-2 | TP1111 | C-2 | TP4802 | D-5 | TP8518 | C-1 |
| IC4513 | E-2 | Q3125 | G-1 | TP2037 | F-4 | TP4803 | E-6 | TP8519 | C-1 |
| IC4514 | E-2 | Q3505 | D-2 | TP3501 | G-6 | TP4804 | D-5 | TP8520 | C-2 |
| IC5600 | C-6 | Q4500 | E-2 | TP3505 | F-5 | TP4805 | D-5 | TP8550 | C-1 |
| IC5601 | C-5 | Q4501 | E-2 | TP3507 | F-4 | TP4806 | E-6 | TP8551 | C-4 |
| IC5602 | C-2 | Q4502 | E-2 | TP3509 | H-5 | TP4807 | E-6 | TP8552 | C-4 |
| IC5603 | B-2 | Q4503 | E-2 | TP3517 | E-6 | TP4808 | D-5 | TP8553 | C-4 |
| IC5604 | C-2 | Q4504 | E-2 | TP3519 | F-6 | TP4809 | E-6 | TP8554 | C-4 |
| IC5704 | E-5 | Q4505 | E-2 | TP4001 | B-3 | TP4810 | E-6 | TP8555 | D-5 |
| IC8004 | D-5 | Q4511 | F-3 | TP4002 | B-2 | TP4811 | D-5 | TP8556 | C-5 |
| IC8502 | C-3 | Q4512 | F-3 | TP4003 | B-2 | TP5600 | D-6 | TP8557 | C-4 |
| IC8503 | C-4 | Q4513 | F-3 | TP4004 | B-2 | TP5601 | C-4 | TP8558 | D-4 |
| IC8505 | C-2 | Q4514 | F-3 | TP4005 | B-2 | TP5602 | C-4 | TP8559 | D-4 |
| | | Q4515 | E-3 | TP4101 | B-1 | TP5603 | B-2 | TP8560 | D-5 |
| | | Q4516 | F-3 | TP4102 | E-4 | TP5604 | B-2 | TP8561 | D-4 |
| | | Q4517 | E-3 | TP4103 | E-5 | TP5605 | C-4 | TP8562 | D-5 |
| | | Q5603 | B-2 | TP4104 | E-4 | TP5606 | D-4 | TP8563 | D-4 |
| | | Q8300 | B-4 | TP4105 | E-5 | TP5607 | E-2 | | |
| | | Q8301 | C-4 | TP4500 | E-2 | TP8315 | C-4 | | |
| | | Q8302 | B-4 | TP4501 | F-2 | TP8502 | E-4 | | |
| | | Q8303 | B-4 | TP4502 | E-2 | TP8503 | C-1 | | |
| | | Q8502 | E-4 | TP4503 | F-2 | TP8504 | C-1 | | |
| | | | | TP4504 | E-2 | TP8505 | B-1 | | |
| | | | | TP4505 | F-2 | TP8506 | B-1 | | |
| | | | | TP4506 | E-2 | TP8507 | B-1 | | |
| | | | | TP4507 | E-2 | TP8508 | B-1 | | |
| | | | | TP4508 | E-2 | TP8509 | B-1 | | |
| | | | | | | TP8510 | C-1 | | |

TH-42PX77U/PE77U
A-BOARD PARTS LOCATION

## Parts Location

**A-BOARD (COMPONENT SIDE)**

| IC | | TRANSISTOR | | Q4003 | E-6 | TP | |
|---|---|---|---|---|---|---|---|
| IC1100 | G-2 | Q1108 | F-3 | Q4004 | E-2 | TP1106 | E-4 |
| IC1101 | G-2 | Q1109 | G-3 | Q4005 | D-5 | TP1107 | E-4 |
| IC1108 | G-2 | Q1110 | G-3 | Q4006 | F-2 | TP1110 | G-2 |
| IC2011 | D-4 | Q2018 | D-5 | Q4010 | G-3 | TP3504 | D-6 |
| IC2106 | D-4 | Q2041 | D-5 | Q4011 | F-3 | TP3506 | B-5 |
| IC2107 | D-5 | Q2042 | D-5 | Q4012 | F-3 | TP3514 | F-2 |
| IC2301 | C-4 | Q2053 | F-2 | Q4013 | G-3 | TP3516 | B-6 |
| IC2303 | C-4 | Q2056 | G-2 | Q4014 | E-5 | TP3518 | C-6 |
| IC3500 | C-5 | Q2057 | G-2 | Q4015 | E-5 | | |
| IC4500 | E-2 | Q2059 | G-2 | Q4506 | E-3 | | |
| IC4504 | F-1 | Q2301 | D-4 | Q4507 | E-3 | | |
| IC4509 | F-3 | Q2302 | B-4 | Q4509 | F-1 | | |
| IC4510 | E-3 | Q3251 | D-3 | Q4510 | F-1 | | |
| IC4515 | D-3 | Q3252 | D-3 | Q5021 | F-2 | | |
| IC4800 | E-1 | Q3253 | D-3 | Q5600 | G-6 | | |
| IC5605 | G-3 | Q3254 | D-3 | Q5601 | G-5 | | |
| IC8001 | E-5 | Q3500 | B-5 | Q5602 | F-5 | | |
| IC8002 | E-5 | Q3502 | F-2 | Q5604 | G-2 | | |
| IC8003 | F-5 | Q3503 | F-2 | Q5605 | G-3 | | |
| IC8300 | H-4 | Q3504 | F-2 | Q5606 | G-5 | | |
| IC8302 | G-6 | Q3509 | B-5 | Q5607 | G-5 | | |
| | | Q3510 | A-5 | | | | |
| | | Q3511 | A-6 | | | | |

TH-42PX77U/PE77U
A-BOARD PARTS LOCATION

## A-BOARD (COMPONENT SIDE)
## TNPH0692AES

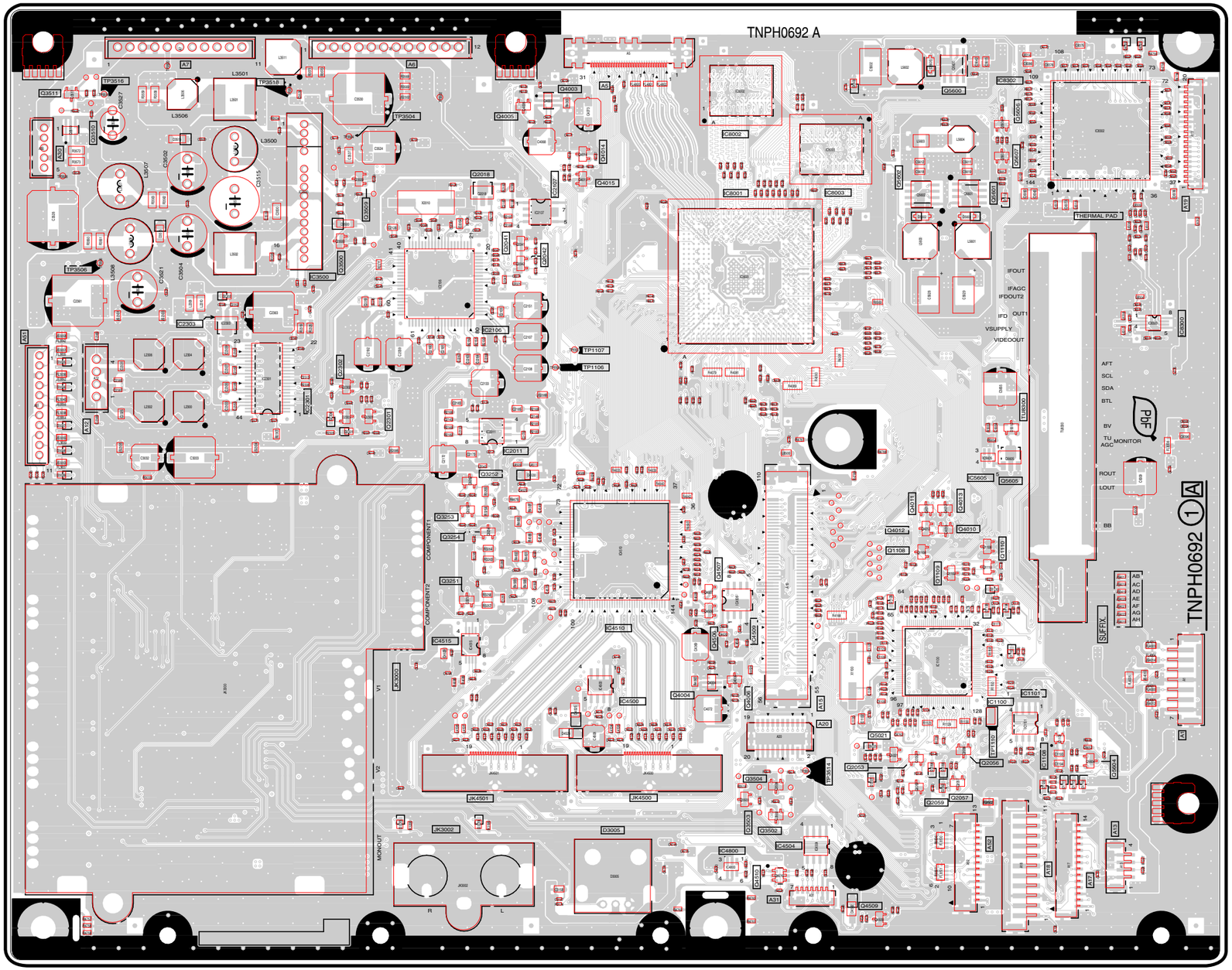


TH-42PX77U/PE77U
A-BOARD TNPH0692AES

TH-42PX77U/PE77U
A-BOARD TNPH0692AES

# 14.4. D-Board

## D-BOARD (FOIL SIDE)
## TZTNP01LPTU

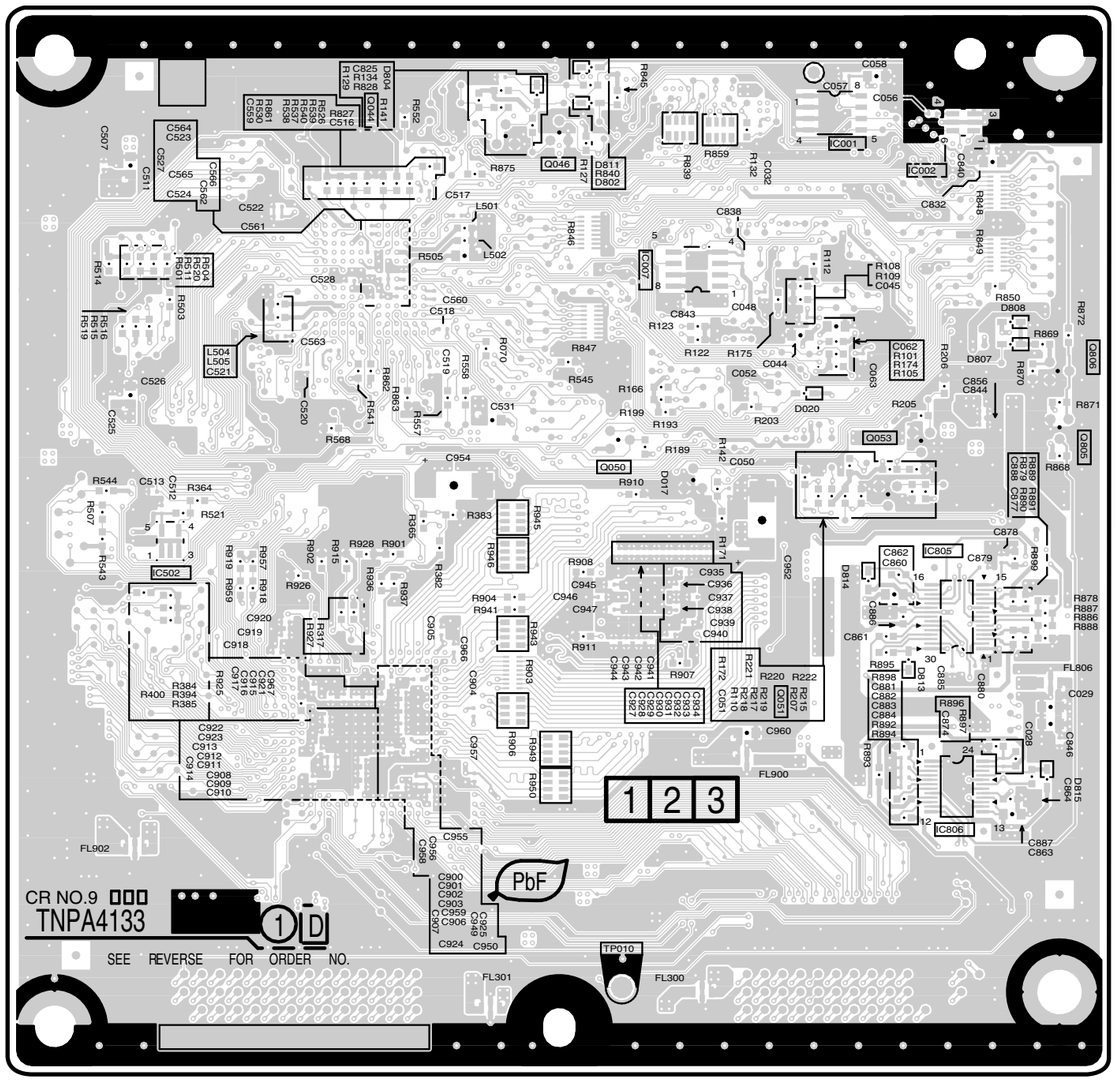


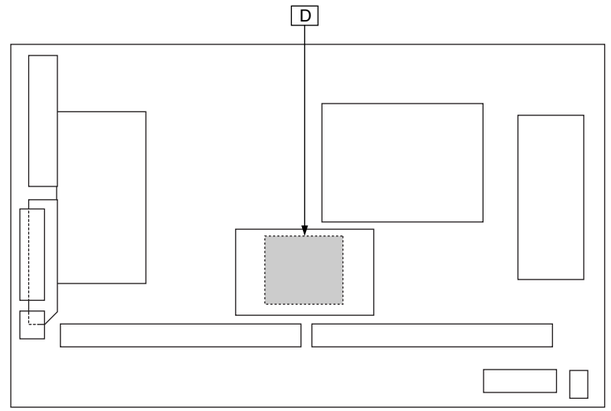


### Parts Location

| D-BOARD (FOIL SIDE) | | | |
|---|---|---|---|
| **IC** | | **TRANSISTOR** | |
| IC9001 | E-5 | Q9044 | C-5 |
| IC9002 | E-5 | Q9046 | C-5 |
| IC9007 | D-5 | Q9050 | D-4 |
| IC9502 | B-3 | Q9051 | D-3 |
| IC9805 | E-3 | Q9053 | E-4 |
| IC9806 | E-2 | Q9805 | F-4 |
| | | Q9806 | F-4 |
| **TEST POINT** | | | |
| TP010 | C-2 | | |

## D-BOARD (COMPONENT SIDE)
## TZTNP01LPTU

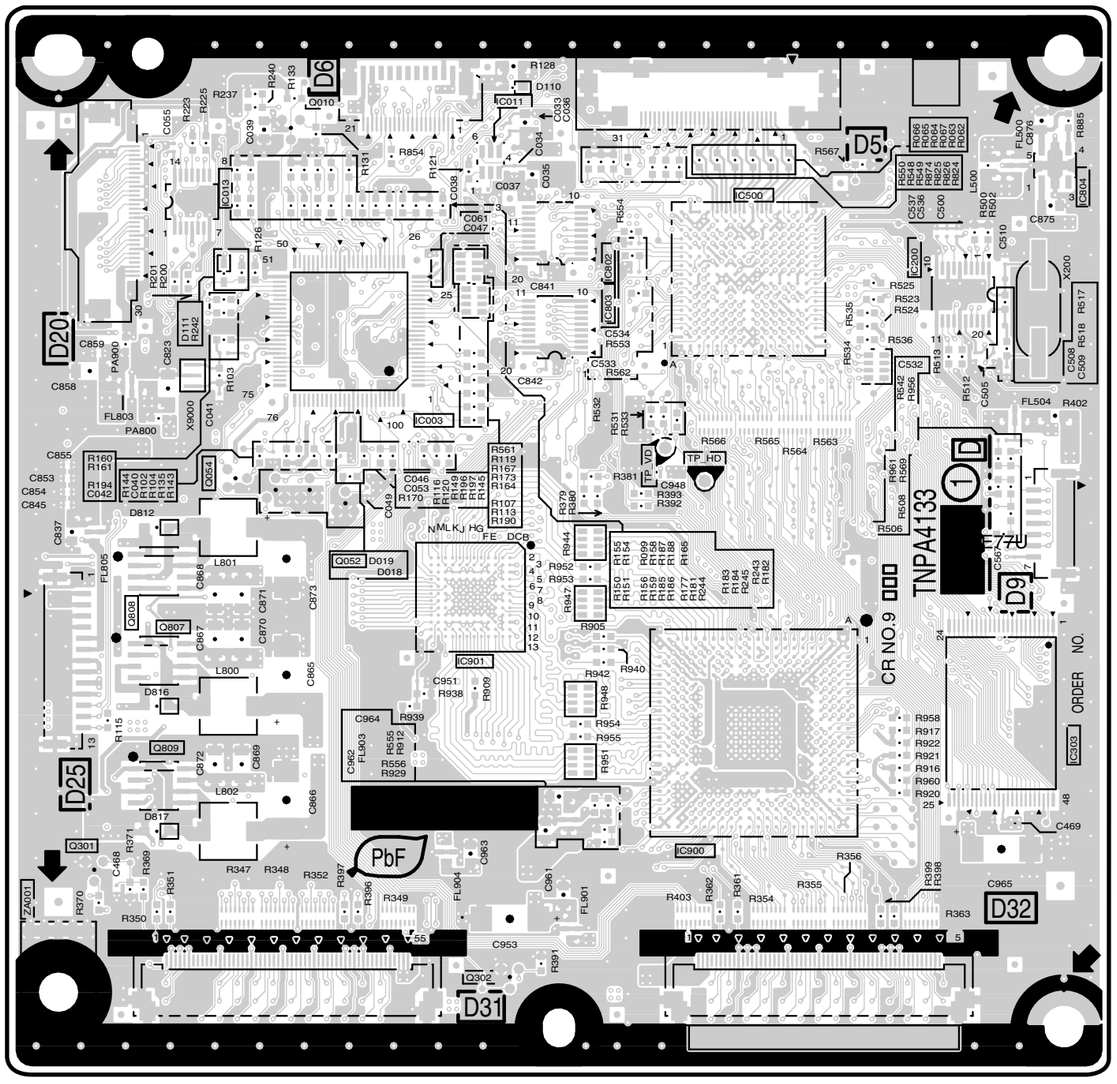


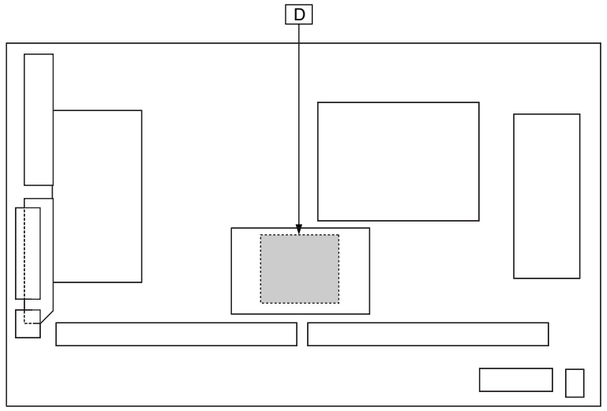


### Parts Location

| D-BOARD (COMPONENT SIDE) | | | |
|---|---|---|---|
| **IC** | | **TRANSISTOR** | |
| IC9003 | C-4 | Q9010 | B-5 |
| IC9011 | C-5 | Q9052 | C-3 |
| IC9013 | B-5 | Q9054 | B-4 |
| IC9200 | E-5 | Q9301 | A-2 |
| IC9303 | E-3 | Q9302 | C-2 |
| IC9500 | D-5 | Q9807 | B-3 |
| IC9802 | D-5 | Q9808 | B-3 |
| IC9803 | D-5 | Q9809 | B-3 |
| IC9804 | E-5 | | |
| IC9900 | D-3 | **TP** | |
| IC9901 | C-3 | TP-HD | D-4 |
| | | TP-VD | D-4 |

## 14.5. C1-Board

**Parts Location**

| C1-BOARD | |
|---|---|
| **IC** | |
| IC7101<br>IC7102 | G-2<br>G-2 |

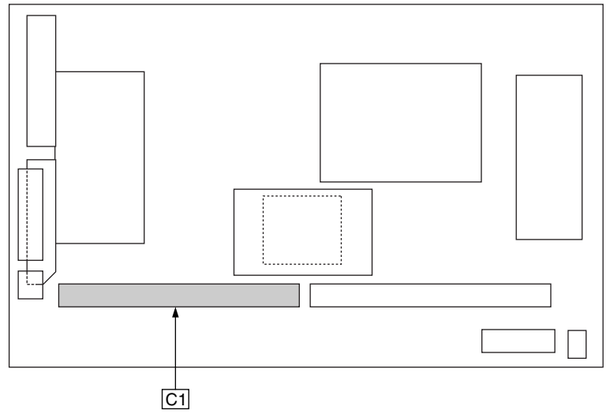


**C1-BOARD (FOIL SIDE)**
**TXNC11HNTU**

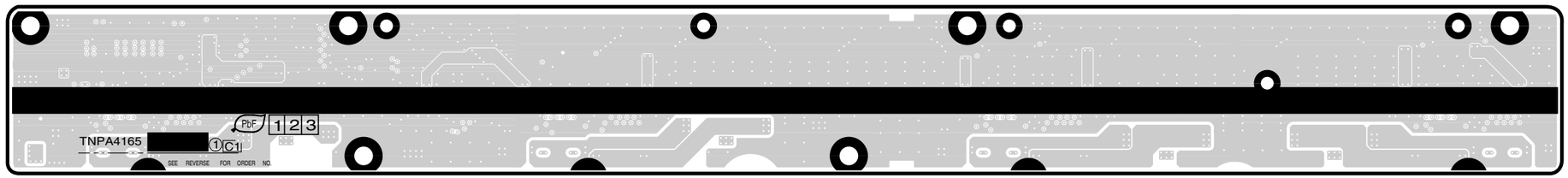


**C1-BOARD (COMPONENT SIDE)**
**TXNC11HNTU**

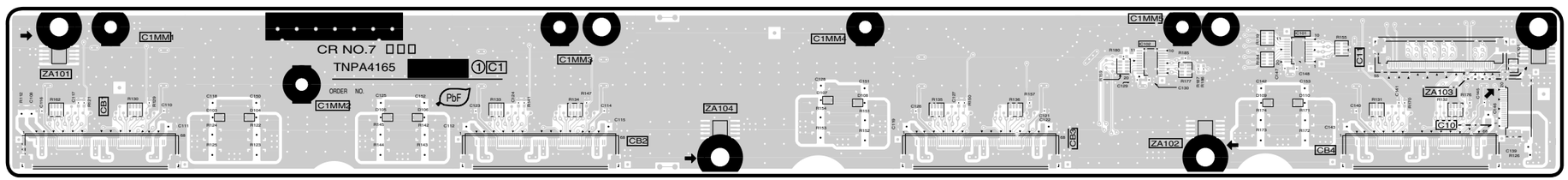


TH-42PX77U/PE77U
C1-BOARD TXNC11HNTU

TH-42PX77U/PE77U
C1-BOARD TXNC11HNTU

## 14.6. C2-Board

**Parts Location**

| C2-BOARD | |
|---|---|
| **IC** | |
| IC7201<br>IC7202<br>IC7204 | B-1<br>B-2<br>C-2 |

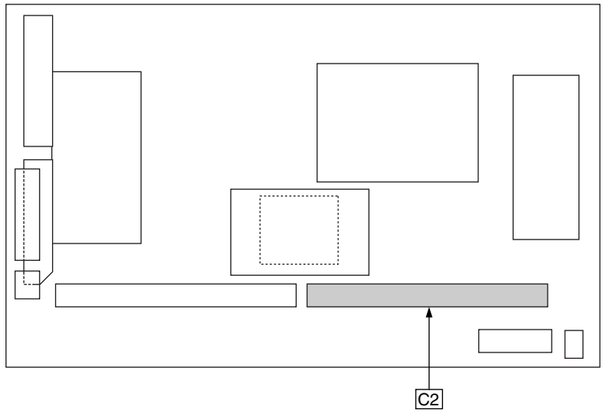


**C2-BOARD (FOIL SIDE)**
**TXNC21HNTU**

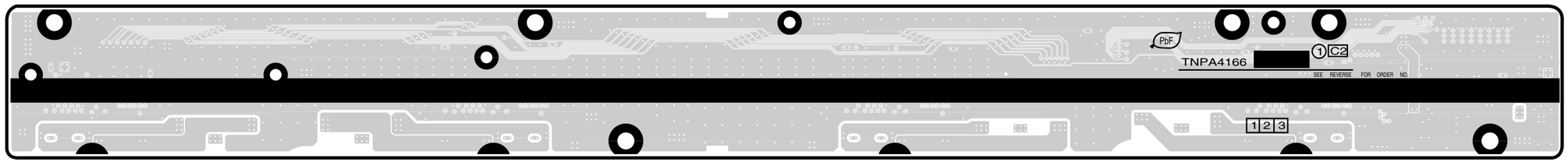


**C2-BOARD (COMPONENT SIDE)**
**TXNC21HNTU**

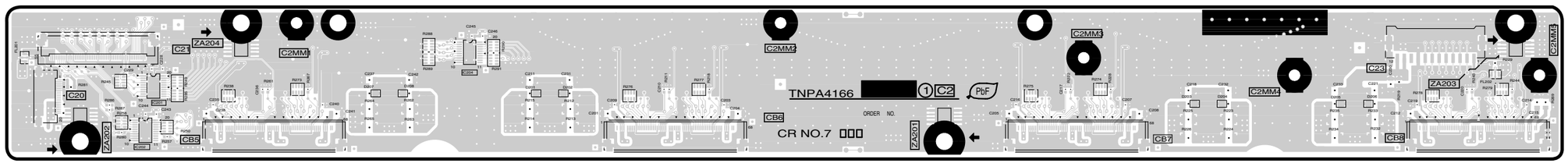


TH-42PX77U/PE77U
C2-BOARD TXNC21HNTU

TH-42PX77U/PE77U
C2-BOARD TXNC21HNTU

## 14.7. SC-Board

### SC-BOARD (FOIL SIDE)
### TXNSC1HNTU

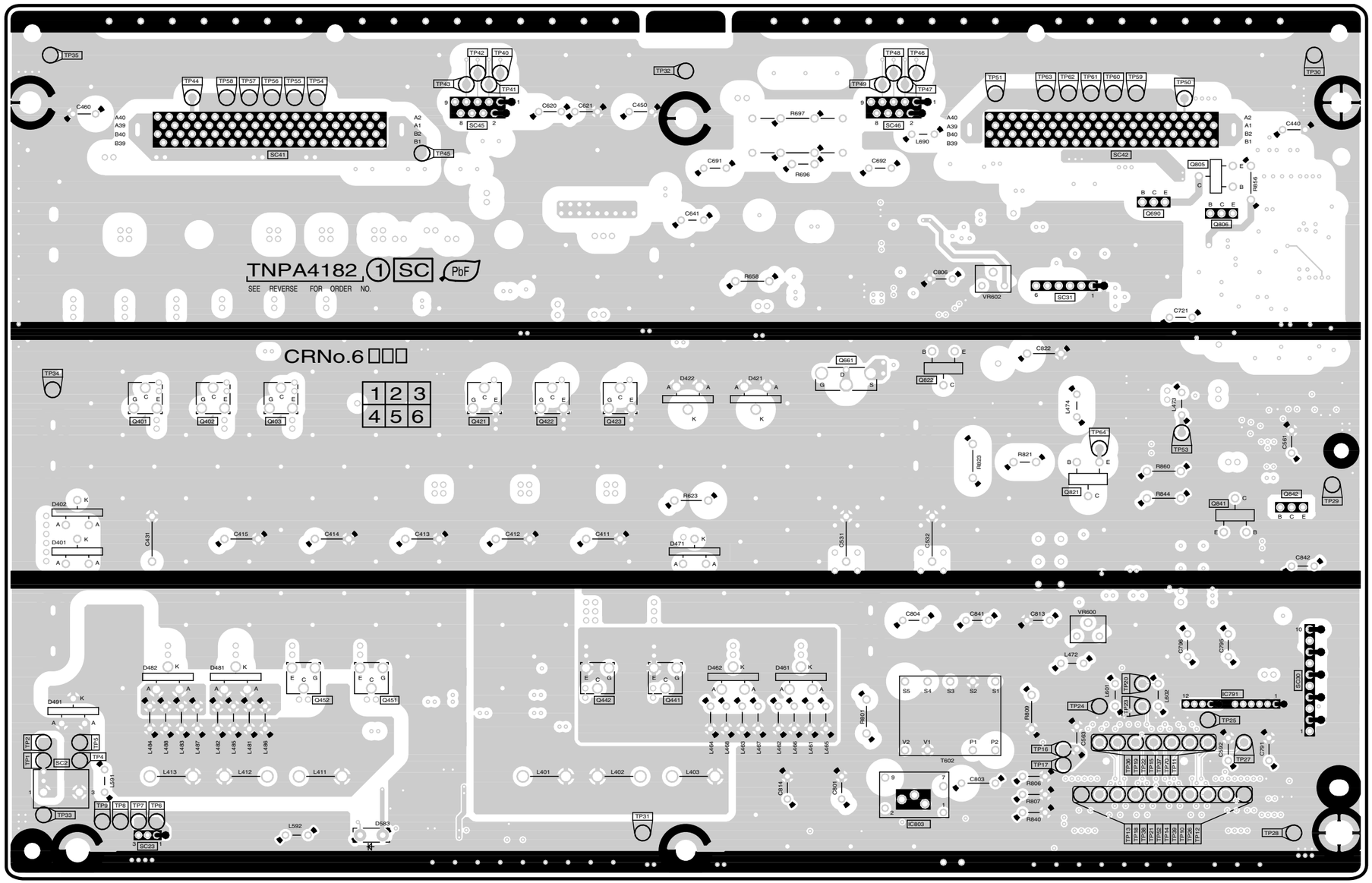


TH-42PX77U/PE77U
SC-BOARD TXNSC1HNTU

TH-42PX77U/PE77U
SC-BOARD TXNSC1HNTU

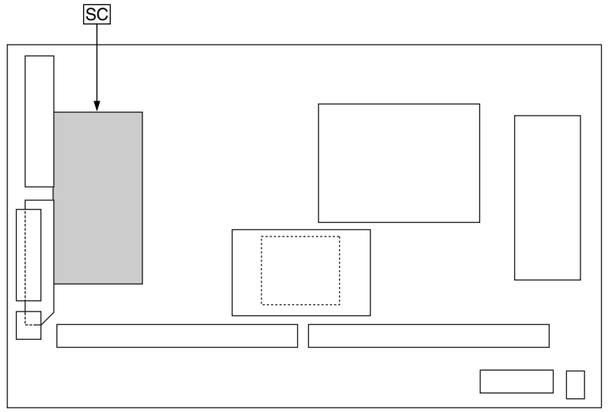


## Parts Location

| SC-BOARD (FOIL SIDE) | | | | | |
|---|---|---|---|---|---|
| **TRANSISTOR** | | **TP** | | TP41 | D-5 |
| IC6791 | H-2 | TP1 | A-2 | TP42 | D-5 |
| IC6803 | F-1 | TP2 | A-2 | TP43 | D-5 |
| **TRANSISTOR** | | TP4 | B-2 | TP44 | B-5 |
| | | TP5 | B-2 | TP45 | D-5 |
| Q6401 | B-4 | TP6 | B-1 | TP46 | F-5 |
| Q6402 | B-4 | TP7 | B-1 | TP47 | F-5 |
| Q6403 | C-4 | TP8 | B-1 | TP48 | F-5 |
| Q6421 | D-4 | TP9 | B-1 | TP49 | F-5 |
| Q6422 | D-4 | TP10 | H-1 | TP50 | H-5 |
| Q6423 | E-4 | TP11 | H-2 | TP51 | G-5 |
| Q6441 | E-2 | TP12 | H-1 | TP52 | H-1 |
| Q6442 | E-2 | TP13 | G-1 | TP53 | H-3 |
| Q6451 | C-2 | TP14 | H-1 | TP54 | C-5 |
| Q6452 | C-2 | TP15 | H-2 | TP55 | C-5 |
| Q6661 | F-4 | TP16 | G-2 | TP56 | C-5 |
| Q6690 | H-5 | TP17 | G-2 | TP57 | C-5 |
| Q6805 | H-5 | TP18 | G-1 | TP58 | B-5 |
| Q6806 | H-5 | TP19 | G-2 | TP59 | G-5 |
| Q6821 | G-3 | TP20 | G-2 | TP60 | G-5 |
| Q6822 | F-4 | TP21 | G-1 | TP61 | G-5 |
| Q6841 | H-3 | TP22 | G-2 | TP62 | G-5 |
| Q6842 | H-3 | TP23 | G-2 | TP63 | G-5 |
| | | TP24 | G-2 | TP64 | G-3 |
| | | TP25 | H-2 | TP70 | H-2 |
| | | TP26 | H-1 | **VOLUME** | |
| | | TP27 | H-2 | | |
| | | TP28 | H-1 | VR6600 | G-2 |
| | | TP29 | H-3 | VR6602 | G-4 |
| | | TP30 | H-5 | | |
| | | TP31 | E-1 | | |
| | | TP32 | E-5 | | |
| | | TP33 | A-1 | | |
| | | TP34 | A-4 | | |
| | | TP35 | A-5 | | |
| | | TP36 | G-2 | | |
| | | TP37 | H-2 | | |
| | | TP38 | G-1 | | |
| | | TP39 | H-1 | | |
| | | TP40 | D-5 | | |



## Parts Location

| SC-BOARD (COMPONENT SIDE) | | | | | | | |
|---|---|---|---|---|---|---|---|
| **IC** | | **PHOTO COUPLER** | | Q6642 | F-5 | **TP** | |
| IC6471 | B-4 | PC6480 | B-4 | Q6643 | F-5 | TP15V | G-1 |
| IC6472 | B-3 | PC6701 | A-4 | Q6644 | G-5 | TPSC1 | D-5 |
| IC6501 | G-4 | PC6702 | A-4 | Q6645 | G-5 | TPSOS6 | C-2 |
| IC6521 | F-2 | PC6704 | A-4 | Q6646 | G-5 | TPSOS7 | B-2 |
| IC6561 | C-1 | PC6705 | B-4 | Q6647 | H-5 | TPVDA | C-2 |
| IC6562 | B-1 | PC6801 | C-2 | Q6648 | H-5 | TPVSCN | B-3 |
| IC6581 | F-1 | PC6861 | B-4 | Q6661 | D-4 | TPVSET | C-4 |
| IC6671 | E-4 | PC6871 | B-2 | Q6662 | C-4 | TPVSET2 | B-4 |
| IC6721 | A-5 | **TRANSISTOR** | | Q6665 | D-4 | TPVSUS | H-1 |
| IC6722 | A-4 | | | Q6671 | E-5 | **VOLUME** | |
| IC6724 | C-5 | Q6401 | H-4 | Q6672 | F-4 | | |
| IC6725 | C-5 | Q6402 | H-4 | Q6679 | E-5 | VR6600 | C-2 |
| IC6752 | D-4 | Q6403 | G-4 | Q6680 | E-5 | VR6602 | C-4 |
| IC6771 | C-5 | Q6421 | F-4 | Q6690 | B-5 | | |
| IC6772 | C-5 | Q6422 | F-4 | Q6742 | B-4 | | |
| IC6773 | C-4 | Q6423 | E-4 | Q6743 | B-4 | | |
| IC6774 | C-4 | Q6441 | E-2 | Q6762 | F-4 | | |
| IC6791 | B-2 | Q6442 | E-2 | Q6781 | F-5 | | |
| IC6801 | C-2 | Q6451 | G-1 | Q6782 | F-5 | | |
| IC6802 | B-2 | Q6452 | G-1 | Q6791 | C-3 | | |
| IC6803 | D-1 | Q6501 | G-4 | Q6801 | D-1 | | |
| IC6821 | C-4 | Q6502 | G-4 | Q6802 | D-1 | | |
| IC6841 | B-3 | Q6521 | F-4 | Q6805 | B-5 | | |
| IC6861 | B-4 | Q6522 | F-4 | Q6806 | B-5 | | |
| IC6871 | C-3 | Q6531 | F-2 | Q6821 | C-3 | | |
| | | Q6532 | F-2 | Q6822 | D-4 | | |
| | | Q6551 | G-1 | Q6824 | B-3 | | |
| | | Q6552 | G-1 | Q6841 | B-3 | | |
| | | Q6581 | F-1 | Q6842 | B-3 | | |
| | | Q6601 | E-6 | | | | |
| | | Q6602 | D-4 | | | | |
| | | Q6603 | E-6 | | | | |
| | | Q6621 | F-4 | | | | |
| | | Q6622 | G-4 | | | | |

## SC-BOARD (COMPONENT SIDE)
## TXNSC1HNTU

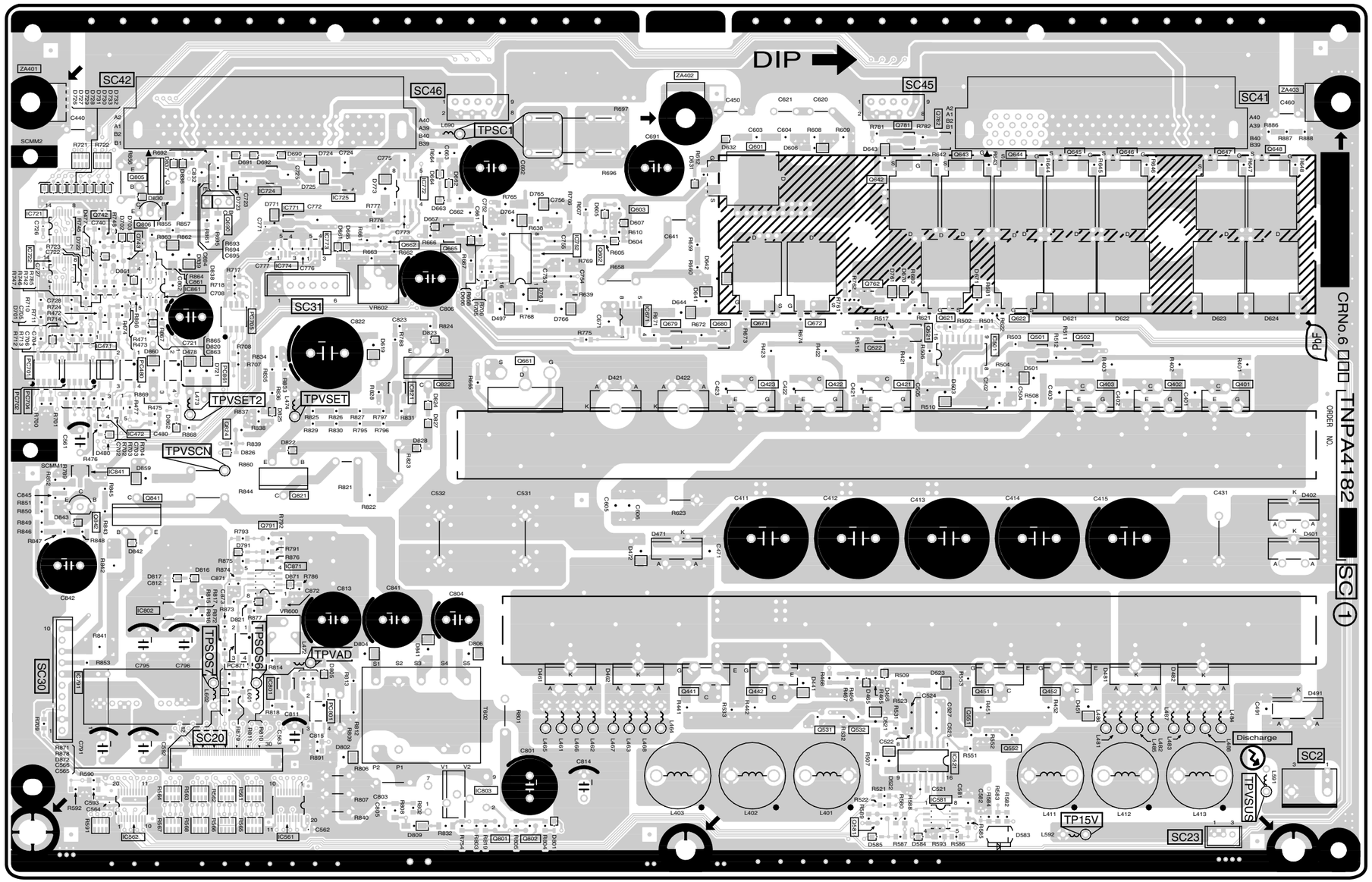


TH-42PX77U/PE77U
SC-BOARD TXNSC1HNTU

TH-42PX77U/PE77U
SC-BOARD TXNSC1HNTU

## 14.8. SU-Board

**Parts Location**

| SU-BOARD | |
|---|---|
| **IC** | |
| IC6901 | G-2 |
| IC6902 | F-2 |
| IC6903 | E-2 |
| IC6904 | D-2 |
| IC6905 | C-2 |
| IC6906 | B-2 |
| IC6910 | B-2 |
| IC6911 | B-2 |
| **TP** | |
| TPSU1 | C-2 |
| TPSU2 | F-2 |

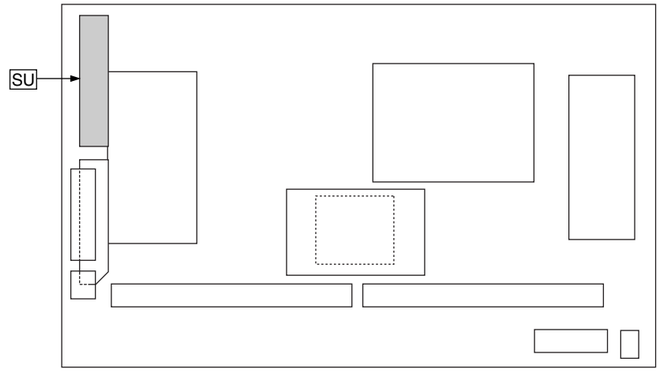


**SU-BOARD (FOIL SIDE)**
**TXNSU1HNTU**

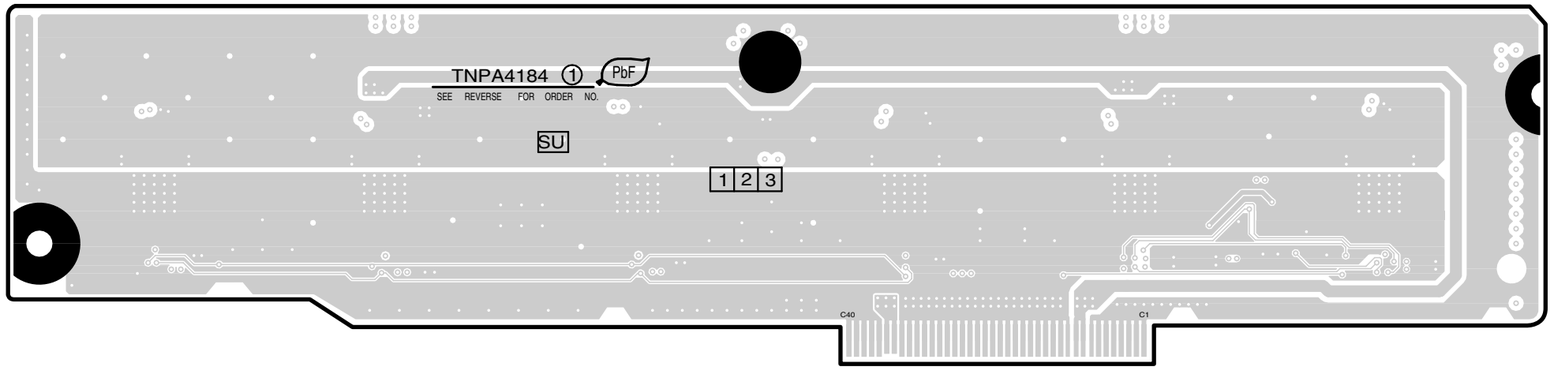


**SU-BOARD (COMPONENT SIDE)**
**TXNSU1HNTU**

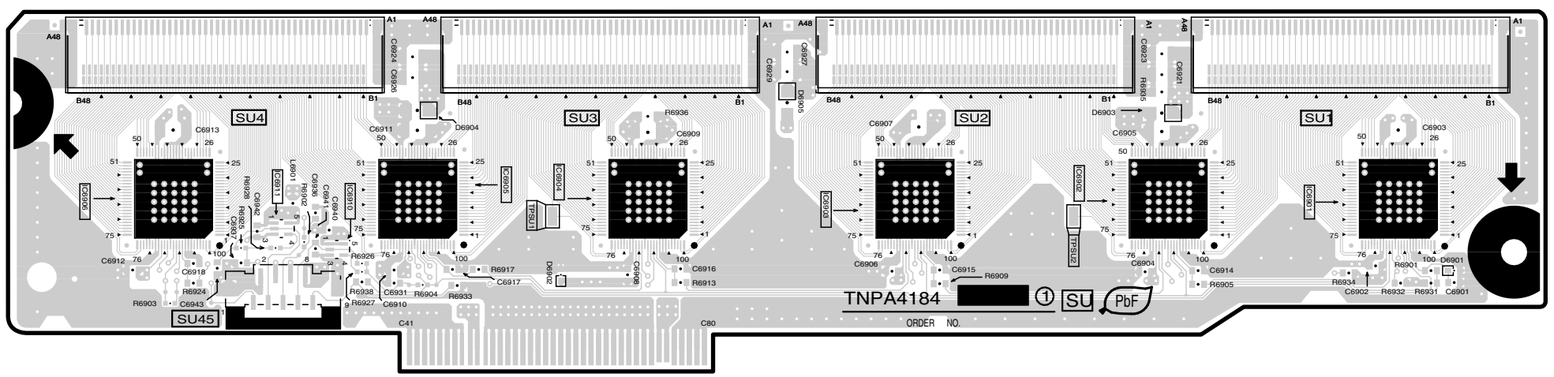


TH-42PX77U/PE77U
SU-BOARD TXNSU1HNTU

TH-42PX77U/PE77U
SU-BOARD TXNSU1HNTU

## 14.9. SD-Board

**Parts Location**

| SD-BOARD | |
|---|---|
| **IC** | |
| IC6951 | G-2 |
| IC6952 | F-2 |
| IC6953 | E-2 |
| IC6954 | D-2 |
| IC6955 | C-2 |
| IC6956 | B-2 |
| IC6960 | G-2 |
| IC6961 | G-2 |
| **TP** | |
| TPSD1 | D-2 |
| TPSD2 | F-2 |

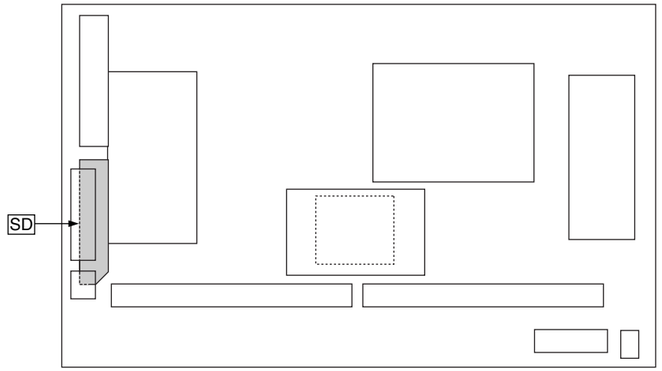


**SD-BOARD (FOIL SIDE)**
**TXNSD1HNTU**

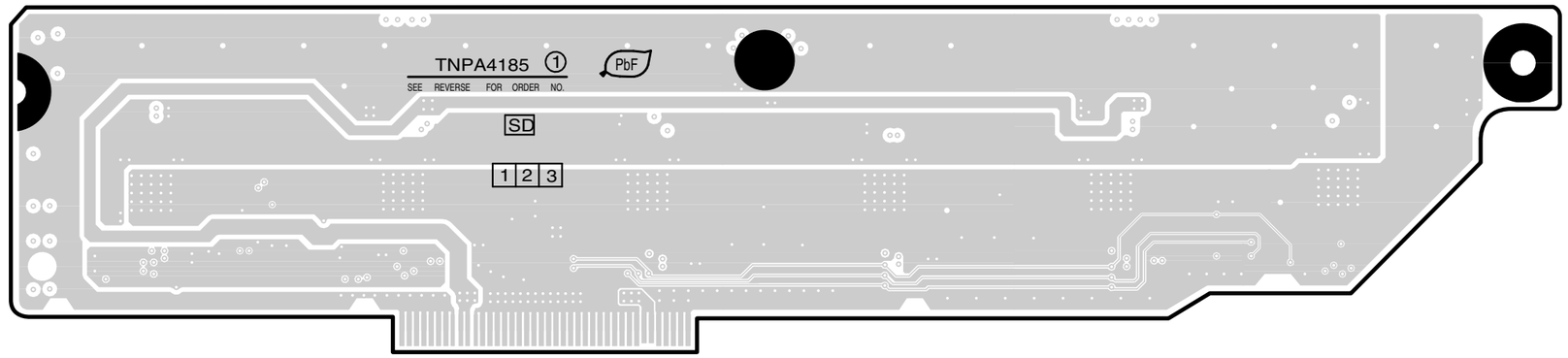


**SD-BOARD (COMPONENT SIDE)**
**TXNSD1HNTU**

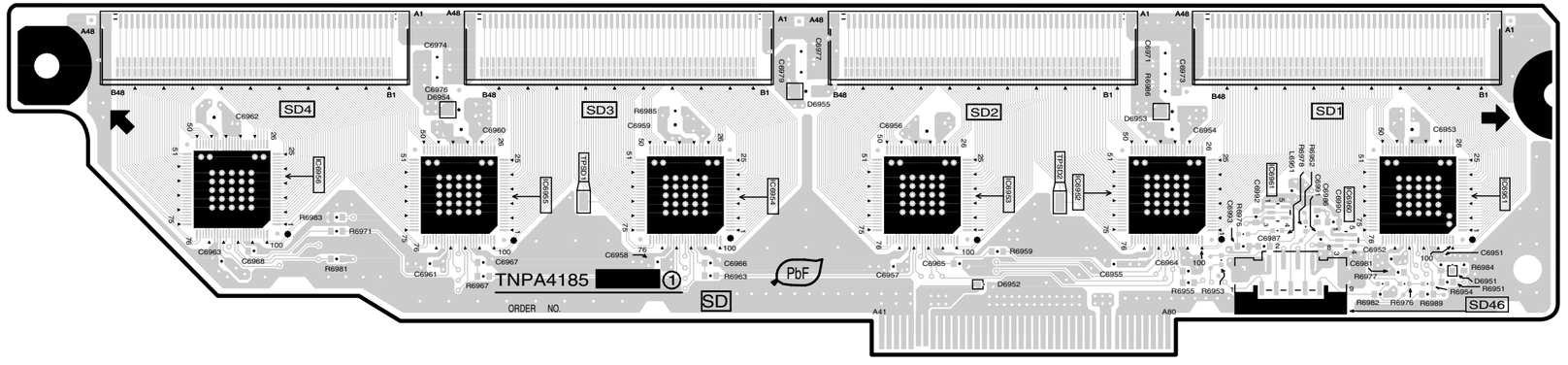


TH-42PX77U/PE77U
SD-BOARD TXNSD1HNTU

TH-42PX77U/PE77U
SD-BOARD TXNSD1HNTU

## 14.10. SS-Board

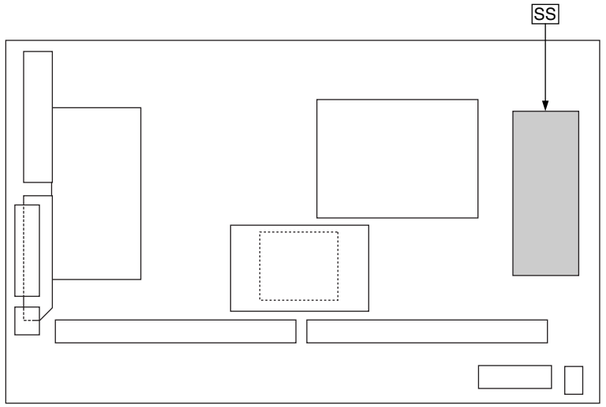


### Parts Location

| SS-BOARD (FOIL SIDE) | | | | | | | |
|---|---|---|---|---|---|---|---|
| **TRANSISTOR** | | **TP** | | TP22 | B-2 | **VOLUME** | |
| Q6001 | H-3 | TP1 | H-1 | TP24 | H-3 | VR6000 | D-2 |
| Q6002 | H-3 | TP2 | H-1 | TP25 | G-3 | | |
| Q6003 | G-3 | TP3 | H-1 | TP26 | F-3 | | |
| Q6021 | G-3 | TP4 | H-1 | TP27 | F-3 | | |
| Q6022 | F-3 | TP5 | H-1 | TP28 | D-3 | | |
| Q6023 | F-3 | TP6 | H-1 | TP29 | D-3 | | |
| Q6041 | D-3 | TP7 | H-2 | TP30 | C-3 | | |
| Q6042 | D-3 | TP8 | H-2 | TP31 | B-3 | | |
| Q6051 | E-3 | TP9 | H-2 | TP33 | B-2 | | |
| Q6052 | E-3 | TP10 | G-2 | TP34 | B-2 | | |
| Q6222 | D-1 | TP11 | G-2 | TP36 | D-3 | | |
| Q6256 | D-1 | TP12 | B-3 | TPVe2 | D-1 | | |
| | | TP13 | B-2 | | | | |
| | | TP14 | B-2 | | | | |
| | | TP15 | B-2 | | | | |
| | | TP16 | B-2 | | | | |
| | | TP17 | B-2 | | | | |
| | | TP18 | B-2 | | | | |
| | | TP19 | B-2 | | | | |
| | | TP20 | B-2 | | | | |

### SS-BOARD (FOIL SIDE)
### TXNSS1HNTUJS

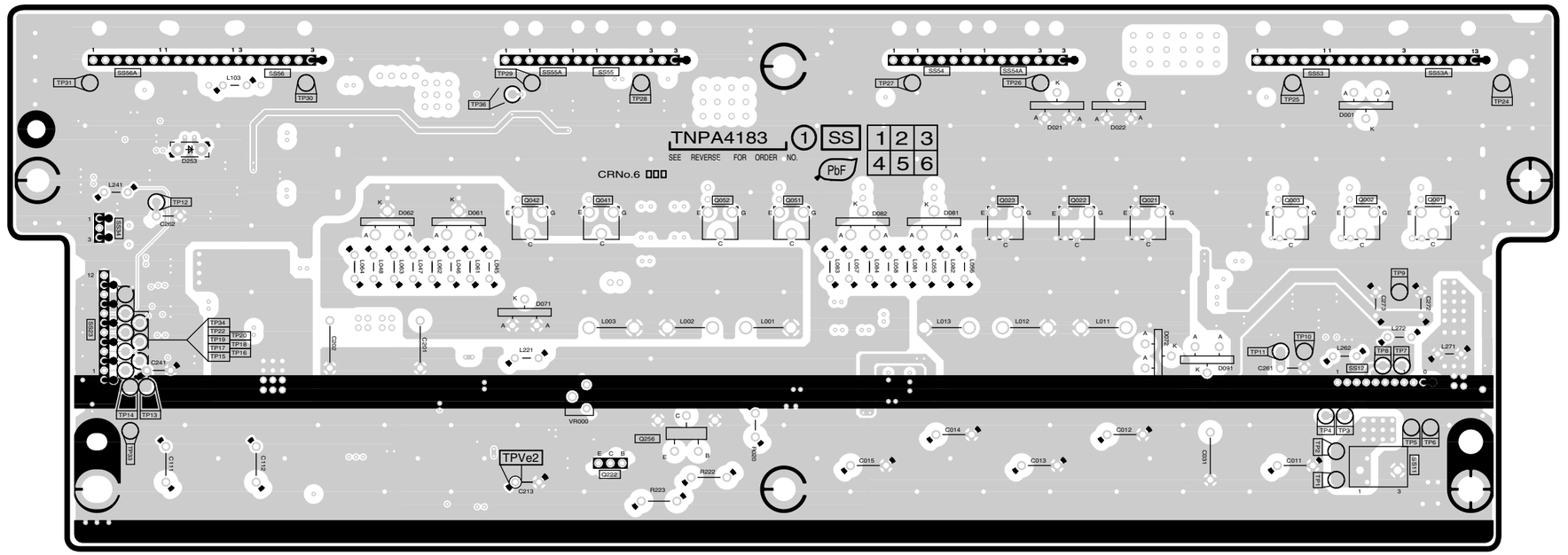


TH-42PX77U/PE77U
SS-BOARD TXNSS1HNTUJS

TH-42PX77U/PE77U
SS-BOARD TXNSS1HNTUJS

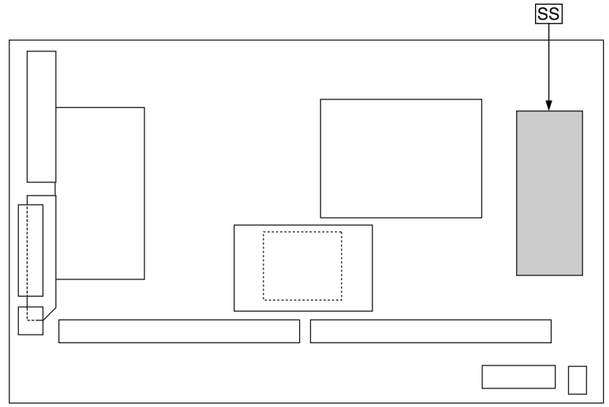


## Parts Location

| SS-BOARD (COMPONENT SIDE) | | | | | | | | | | | |
|---|---|---|---|---|---|---|---|---|---|---|---|
| **IC** | | **TRANSISTOR** | | | | | | **TP** | |
| IC6131 | C-2 | Q6001 | B-2 | Q6111 | F-2 | | | TP15V | B-2 |
| IC6151 | E-2 | Q6002 | B-2 | Q6112 | G-1 | | | TPSOS8 | H-3 |
| IC6191 | H-2 | Q6003 | C-2 | Q6114 | G-1 | | | TPSS1 | G-3 |
| IC6211 | G-1 | Q6021 | C-2 | Q6141 | C-2 | | | TPVDA | B-2 |
| IC6221 | F-1 | Q6022 | D-2 | Q6142 | C-2 | | | TPVe | F-2 |
| IC6241 | H-2 | Q6023 | D-2 | Q6146 | C-2 | | | TPVSUS | B-2 |
| IC6251 | H-2 | Q6031 | F-2 | Q6147 | C-2 | | | **VOLUME** | |
| | | Q6041 | F-2 | Q6171 | F-2 | | | VR6000 | F-2 |
| | | Q6042 | F-2 | Q6172 | F-2 | | | | |
| | | Q6051 | E-2 | Q6181 | E-2 | | | | |
| | | Q6052 | E-2 | Q6222 | F-1 | | | | |
| | | Q6101 | H-3 | Q6251 | H-3 | | | | |
| | | Q6102 | H-2 | Q6256 | E-2 | | | | |
| | | Q6103 | G-2 | Q6271 | F-3 | | | | |
| | | Q6104 | G-2 | | | | | | |
| | | Q6105 | G-3 | | | | | | |
| | | Q6106 | H-2 | | | | | | |

## SS-BOARD (COMPONENT SIDE)
## TXNSS1HNTUJS

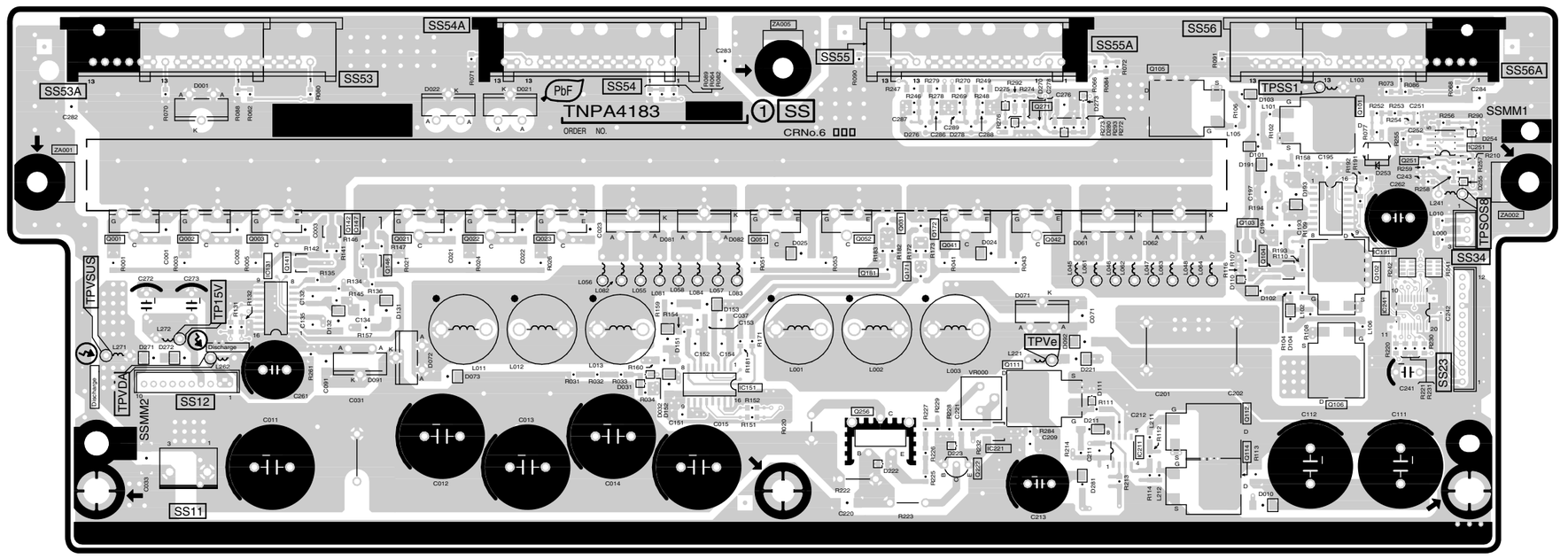


TH-42PX77U/PE77U
SS-BOARD TXNSS1HNTUJS

TH-42PX77U/PE77U
SS-BOARD TXNSS1HNTUJS

# 15 Schematic and Block Diagram

## 15.1. Schematic Diagram Note

**Important Safety Notice**

Components identified by ⚠ mark have special characteristics important for safety.
When replacing any of these components, use only manufacture's specified parts.

**Notes:**

1. **Resistor**
   Unit of resistance is OHM [Ω] (K=1,000, M=1,000,000).
2. **Capacitor**
   Unit of capacitance is μF, unless otherwise noted.
3. Coil
   Unit of inductance is H, unless otherwise noted.
4. Test Point
   ⚲ : Test Point position
5. Earth Symbol
   ⏚ : Chassis Earth (Cold) ⏚ : Line Earth (Hot)
6. Voltage Measurement
   Voltage is measured by a DC voltmeter.
   Conditions of the measurement are the following:
   Power Source ..... AC120V, 50/60Hz
   Receiving Signal ..... Colour Bar signal (RF)
   All customer's controls ..... Maximum positions
7. When arrow mark ( ↗ ) is found, connection is easily found from the direction of arrow.
8. Indicates the major signal flow. : Video ➡ Audio ⇨
9. This schematic diagram is the latest at the time of printing and subject to change without notice.

**Remarks:**

1. The Power Circuit contains a circuit area which uses a separate power supply to isolate the earth connection.
   The circuit is defined by HOT and COLD indications in the schematic diagram. Take the follwing precautions.
   All circuits, except the Power Circuit, are cold.
   Precautions
   a. Do not touch the hot part or the hot and cold parts at the same time or you may be shocked.
   b. Do not short- circuit the hot and cold circuits or a fuse may blow and parts may break.
   c. Do not connect an instrument, such as an oscilloscope, to the hot and cold circuits simultaneously or a fuse may blow.
      Connect the earth of instruments to the earth connection of the circuit being measured.
   d. Make sure to disconnect the power plug before removing the chassis.

# 15.2. Main Block Diagram

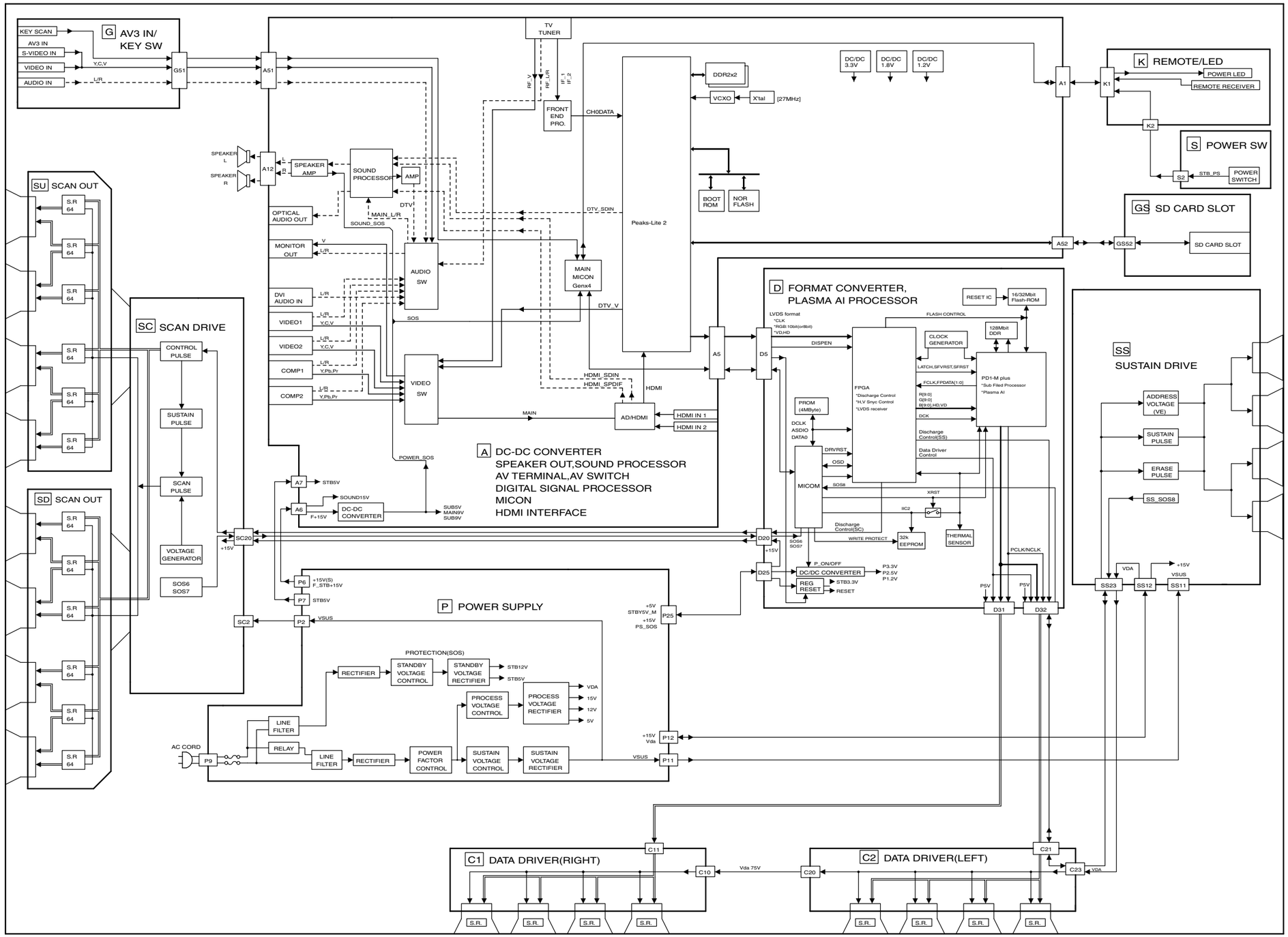


TH-42PX77U/PE77U
Main Block Diagram

TH-42PX77U/PE77U
Main Block Diagram

# 15.3. P-Board Block Diagram

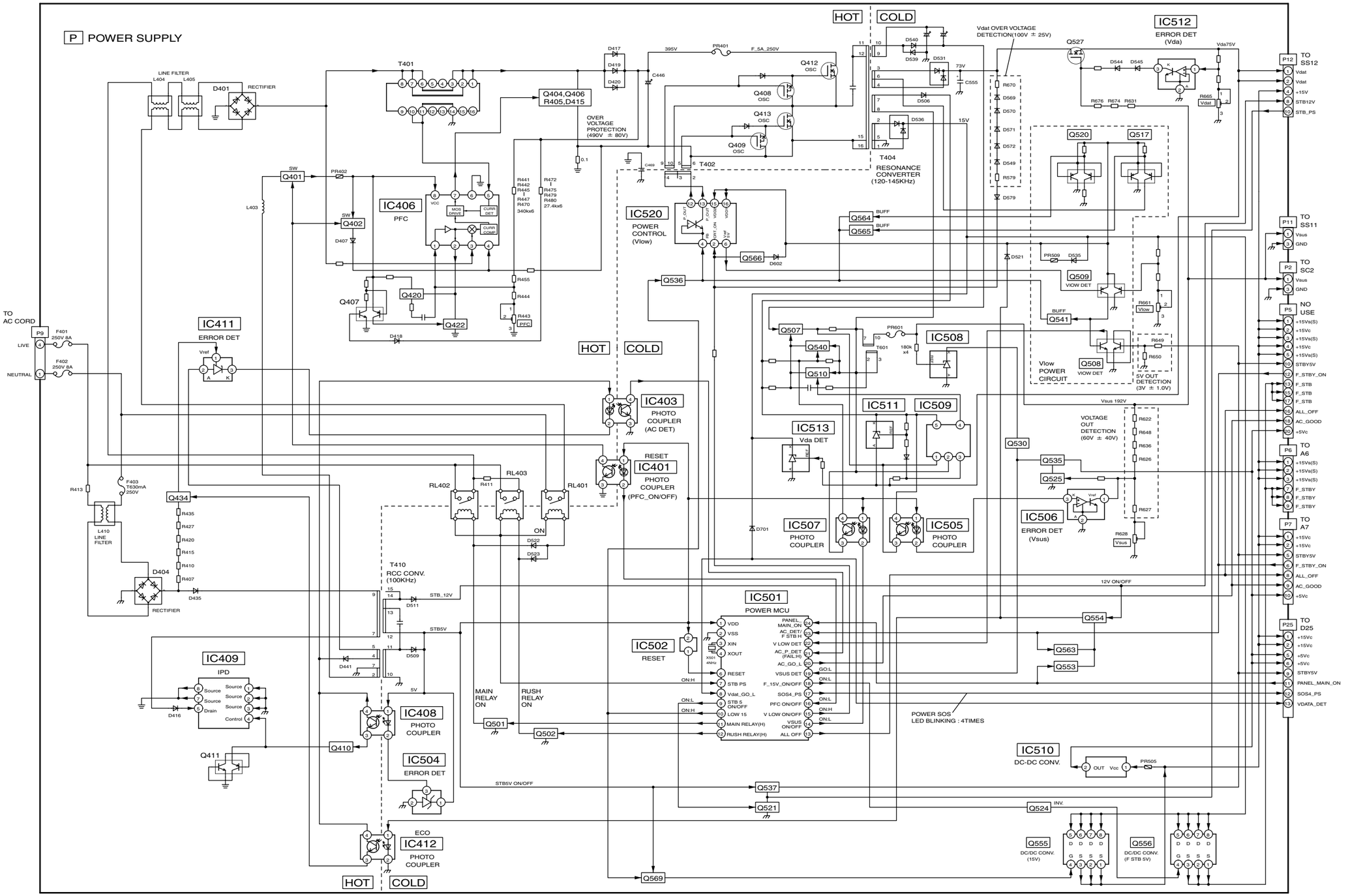


TH-42PX77U/PE77U
P-Board Block Diagram

TH-42PX77U/PE77U
P-Board Block Diagram

# 15.4. P-Board (1 of 6) Schematic Diagram

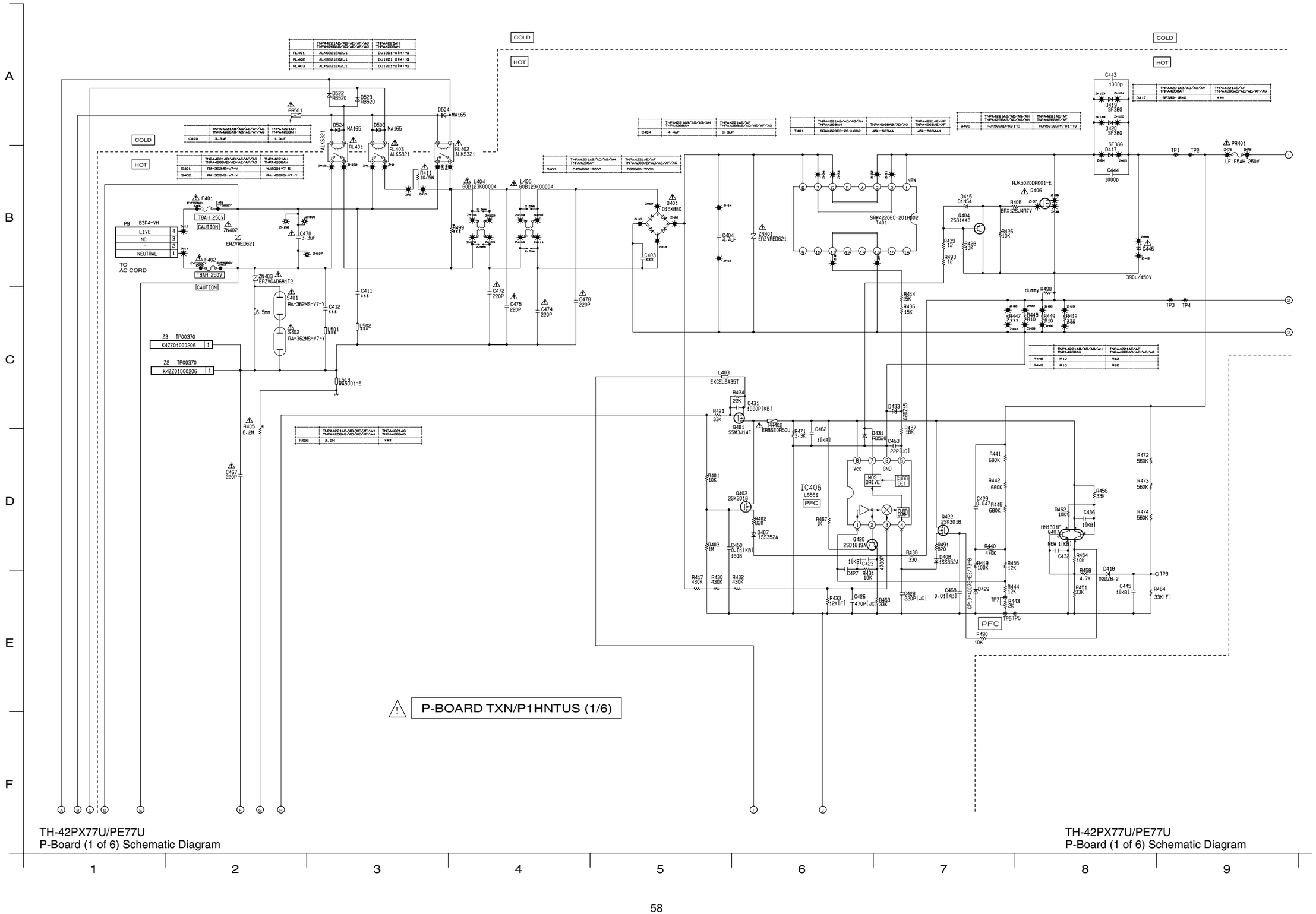


TH-42PX77U/PE77U
P-Board (1 of 6) Schematic Diagram

TH-42PX77U/PE77U
P-Board (1 of 6) Schematic Diagram

# 15.5. P-Board (2 of 6) Schematic Diagram

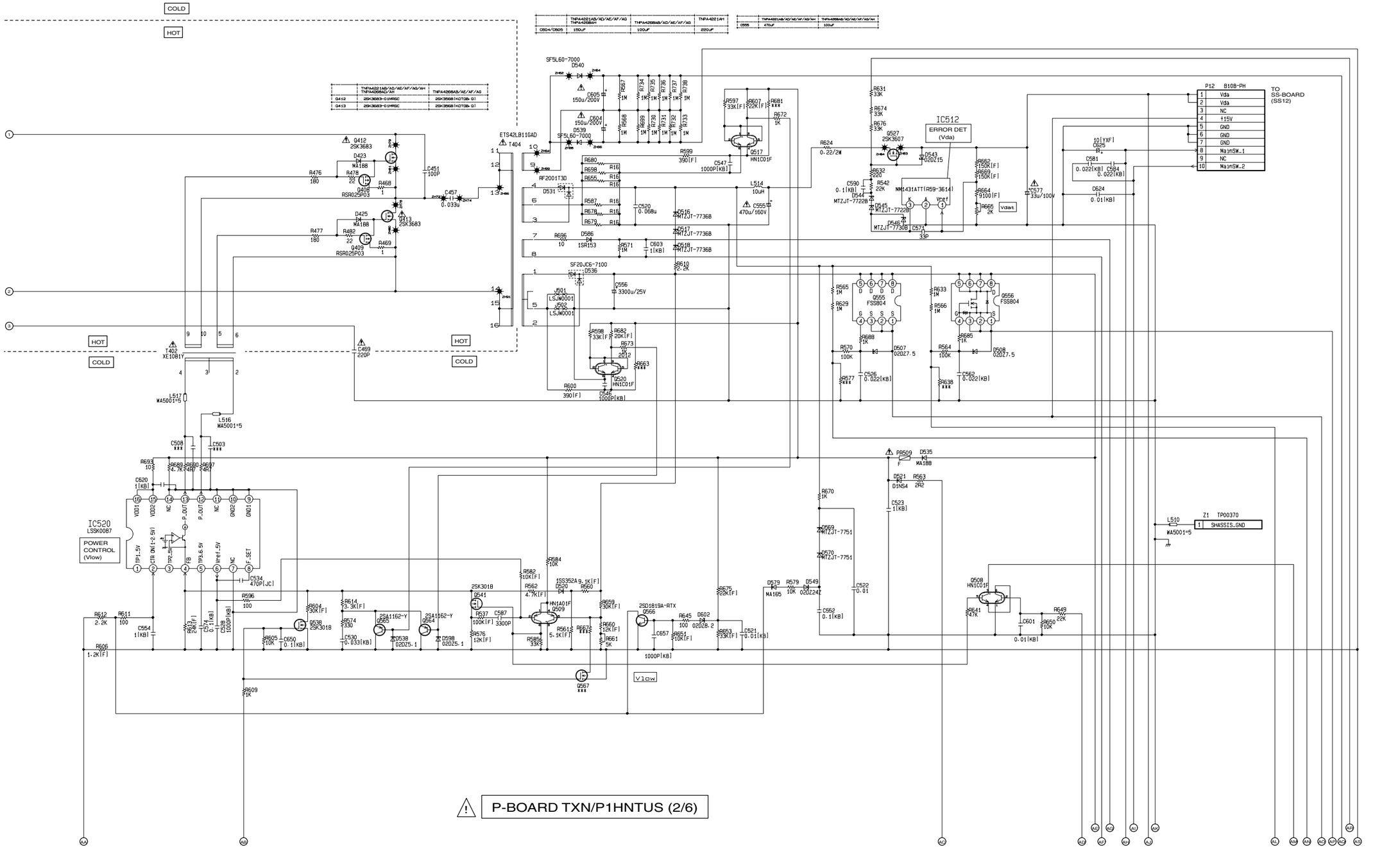


TH-42PX77U/PE77U
P-Board (2 of 6) Schematic Diagram

TH-42PX77U/PE77U
P-Board (2 of 6) Schematic Diagram

10 11 12 13 14 15 16 17 18

# 15.6. P-Board (3 of 6) Schematic Diagram

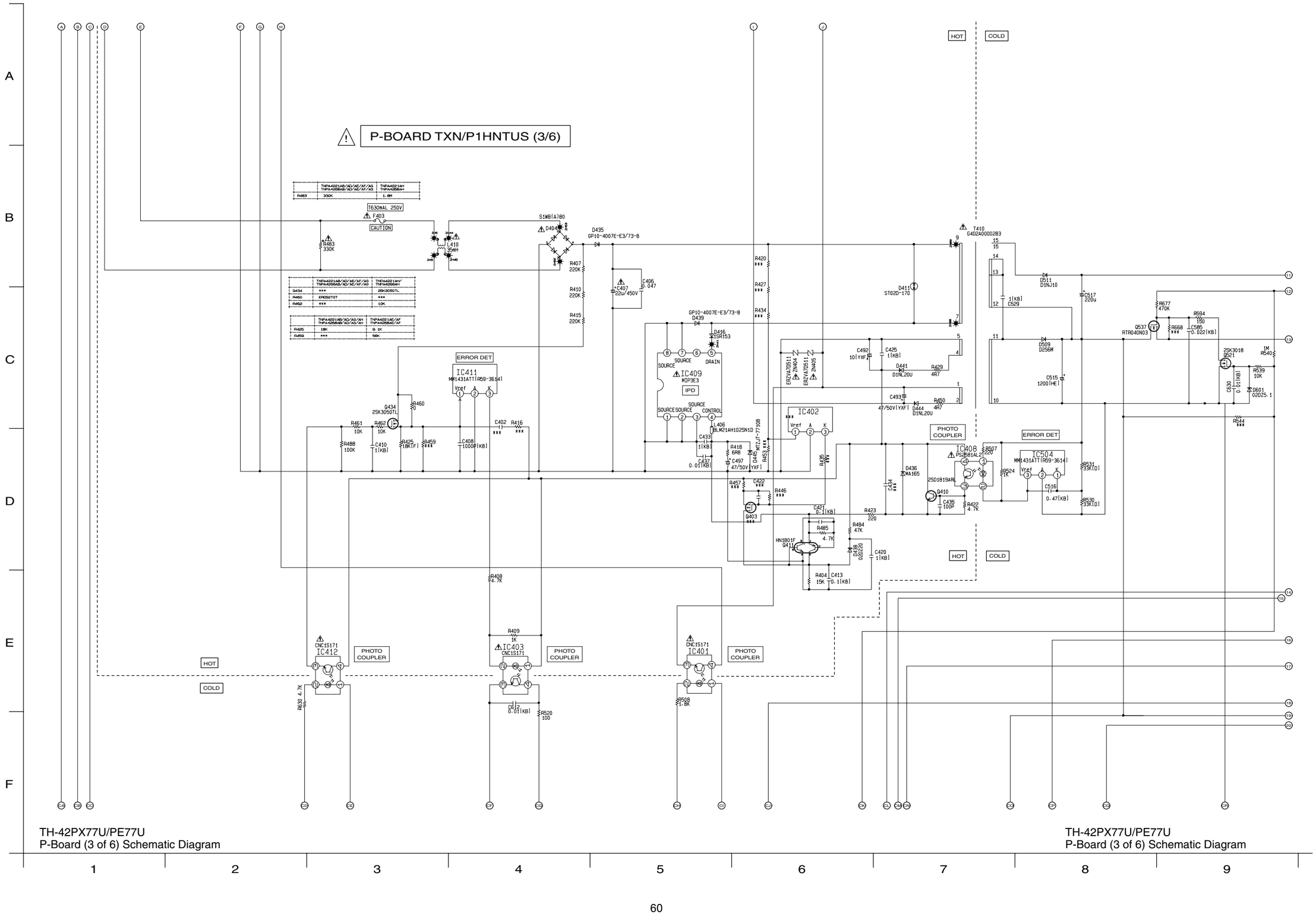

# 15.7. P-Board (4 of 6) Schematic Diagram

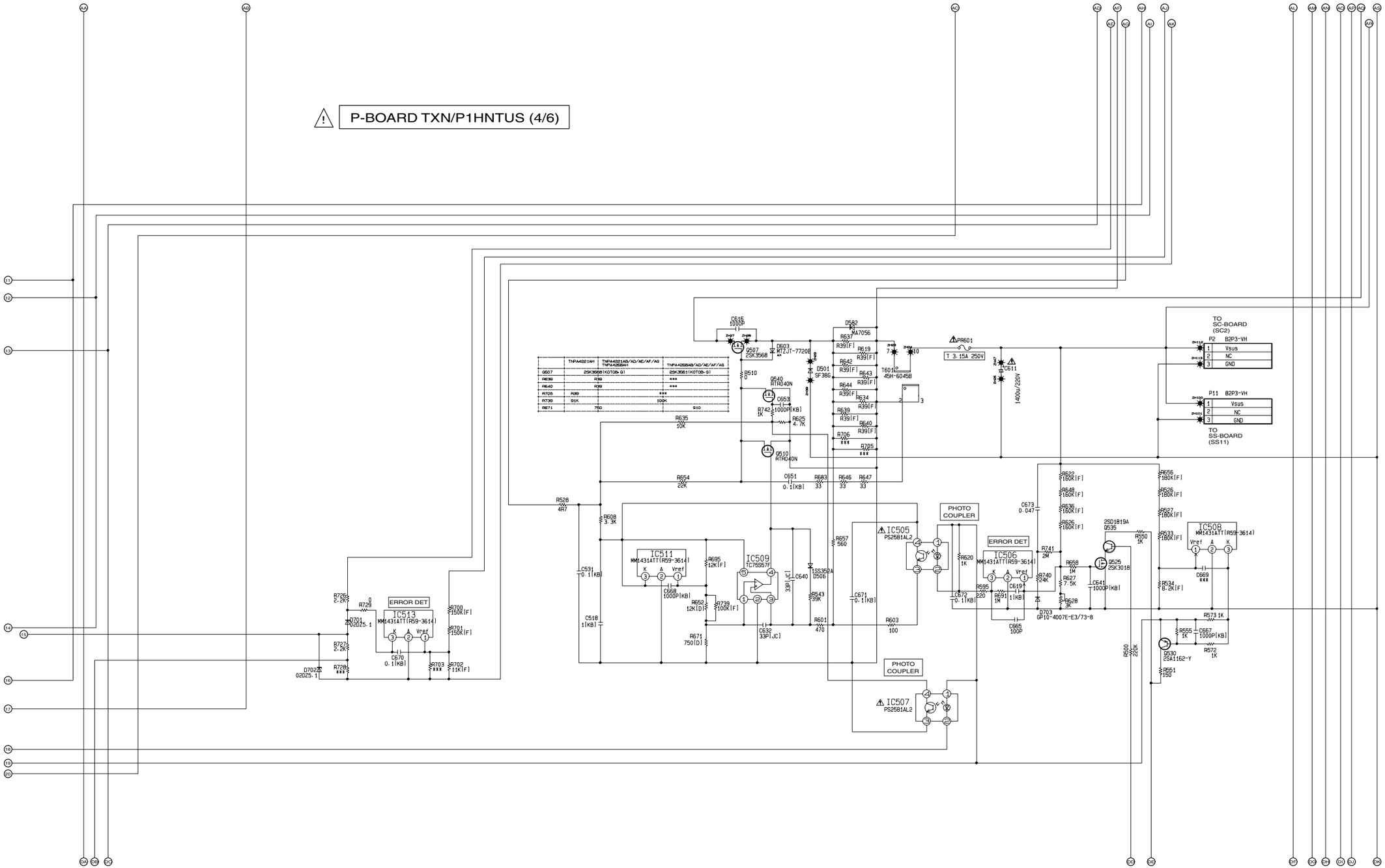


| | TNPA4021AH | TNPA4021AB/AD/AE/AF/AG TNPA4026AH | TNPA4026AB/AD/AE/AF/AG |
|---|---|---|---|
| Q507 | 2SK3568(KOTOB-G) | | 2SK3561(KOTOB-G) |
| R639 | R39 | | *** |
| R640 | R39 | | *** |
| R708 | R39 | *** | |
| R736 | 91K | 100K | |
| R671 | 750 | 910 | |

TH-42PX77U/PE77U
P-Board (4 of 6) Schematic Diagram

TH-42PX77U/PE77U
P-Board (4 of 6) Schematic Diagram

10 11 12 13 14 15 16 17 18

## 15.8. P-Board (5 of 6) Schematic Diagram

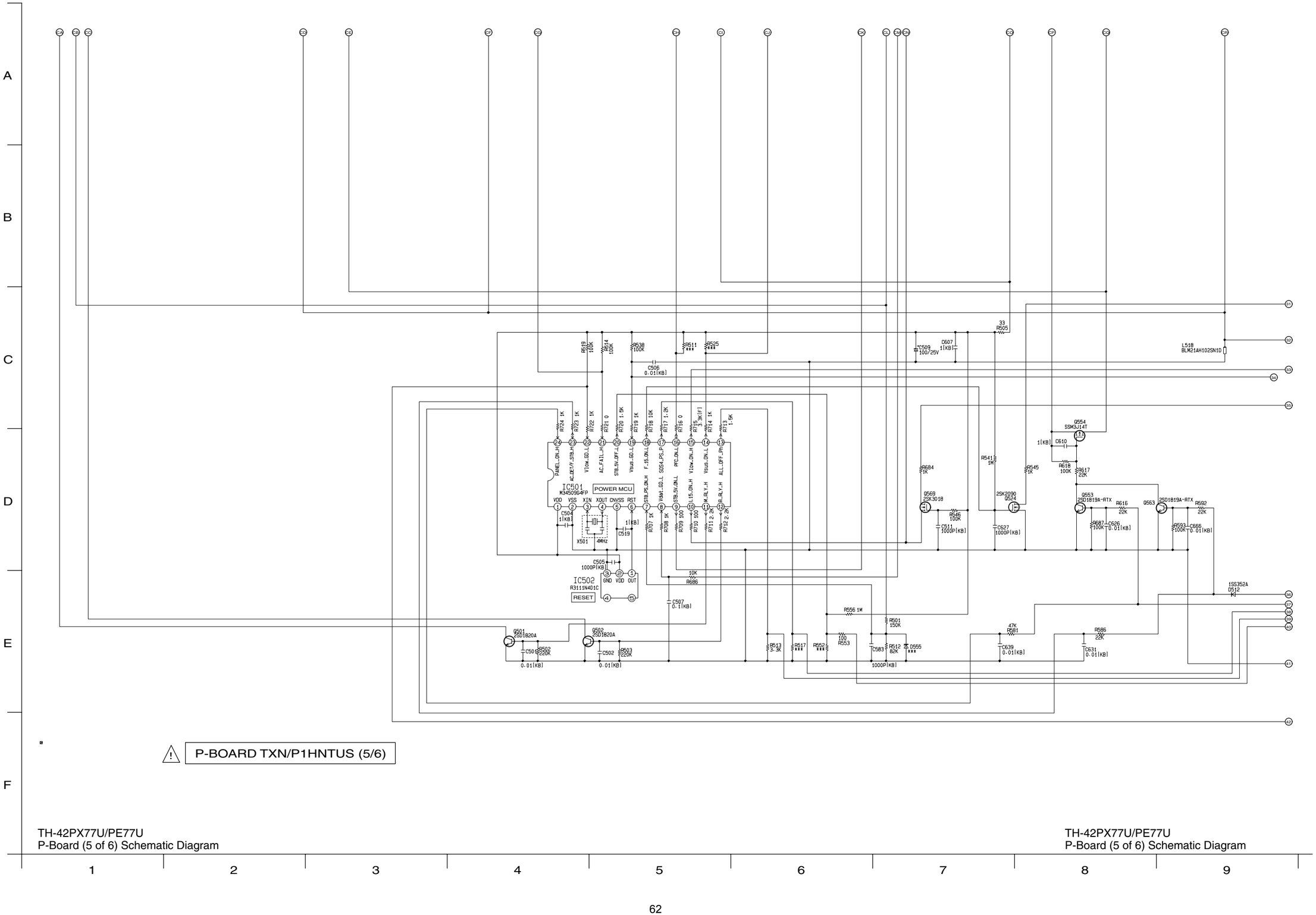

## 15.9. P-Board (6 of 6) Schematic Diagram

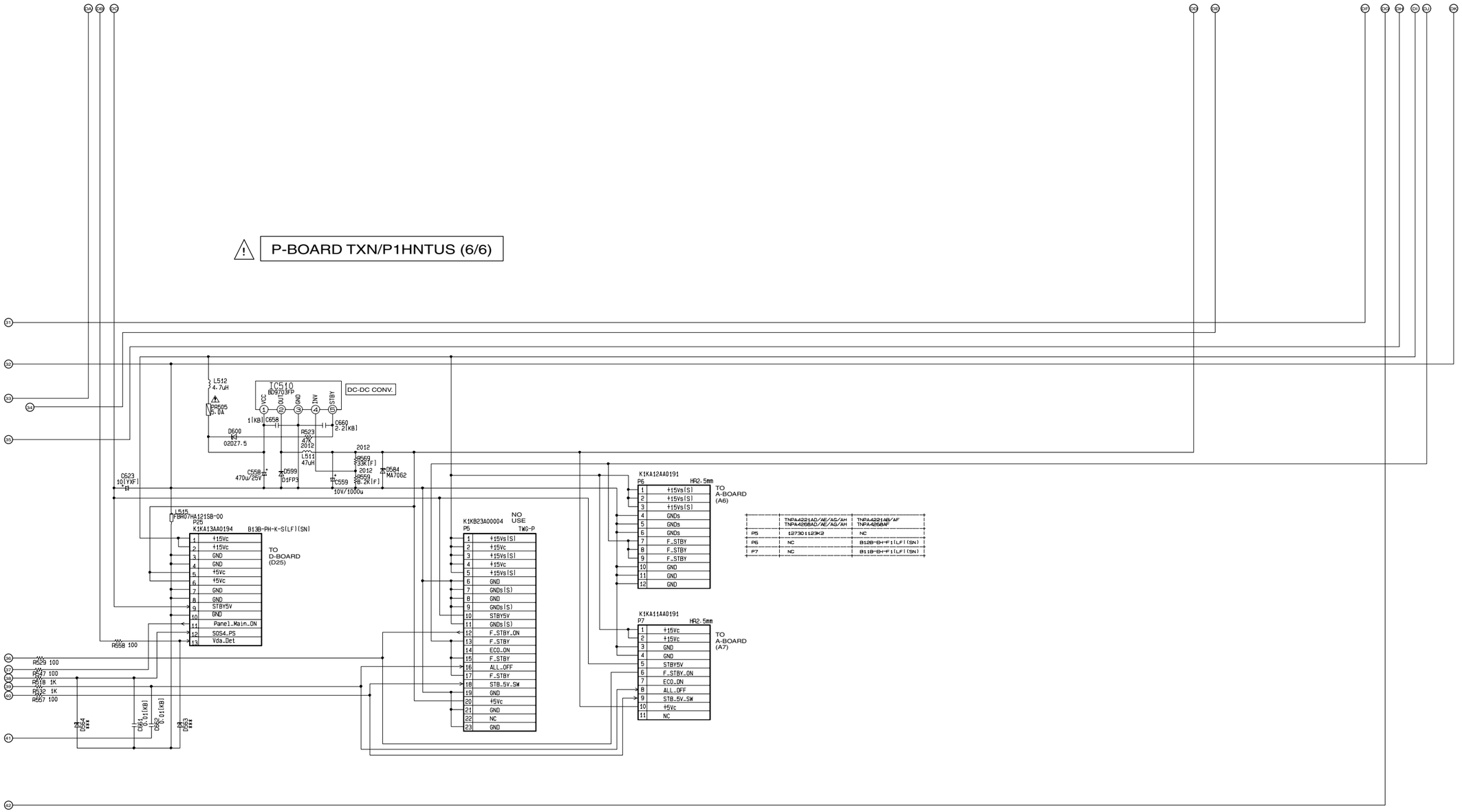


TH-42PX77U/PE77U
P-Board (6 of 6) Schematic Diagram

TH-42PX77U/PE77U
P-Board (6 of 6) Schematic Diagram

10 11 12 13 14 15 16 17 18

# 15.10. G, GS, K and S-Board Block and Schematic Diagram

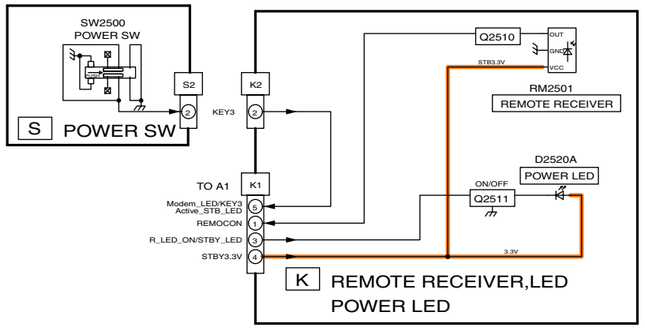


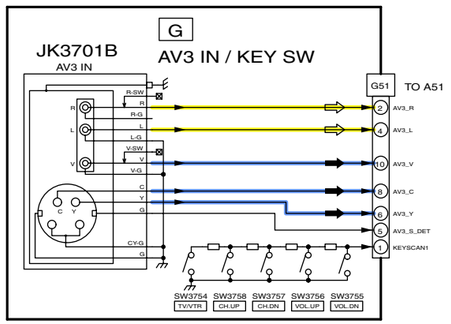


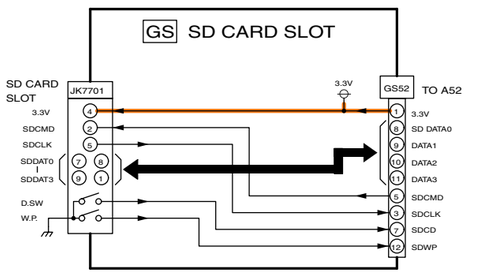


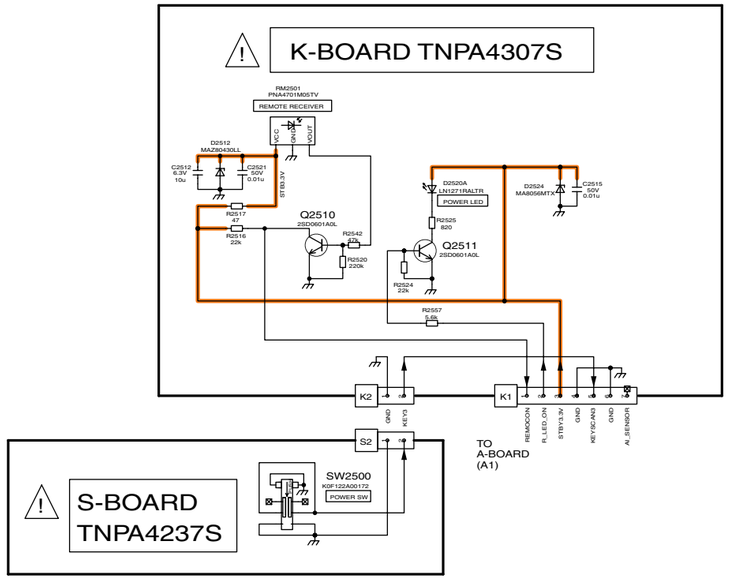


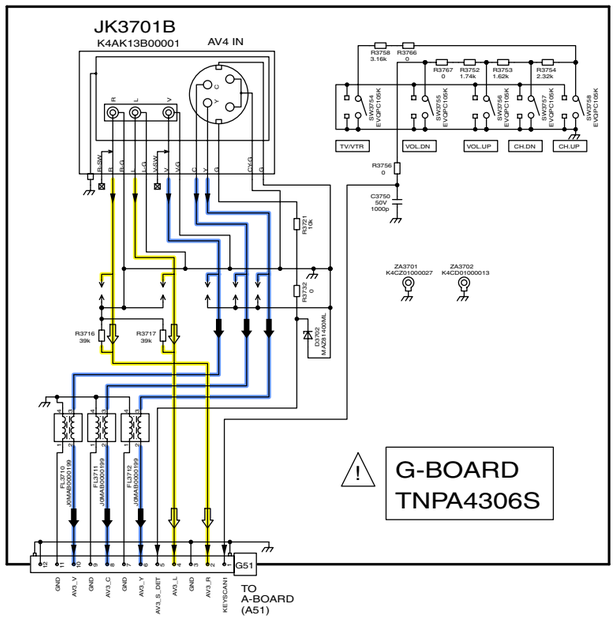


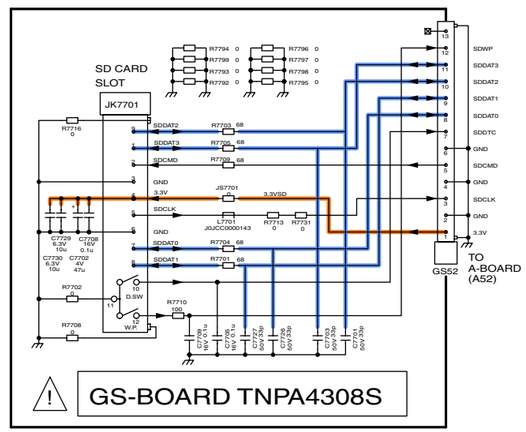

# 15.11. A-Board (1 of 5) Block Diagram

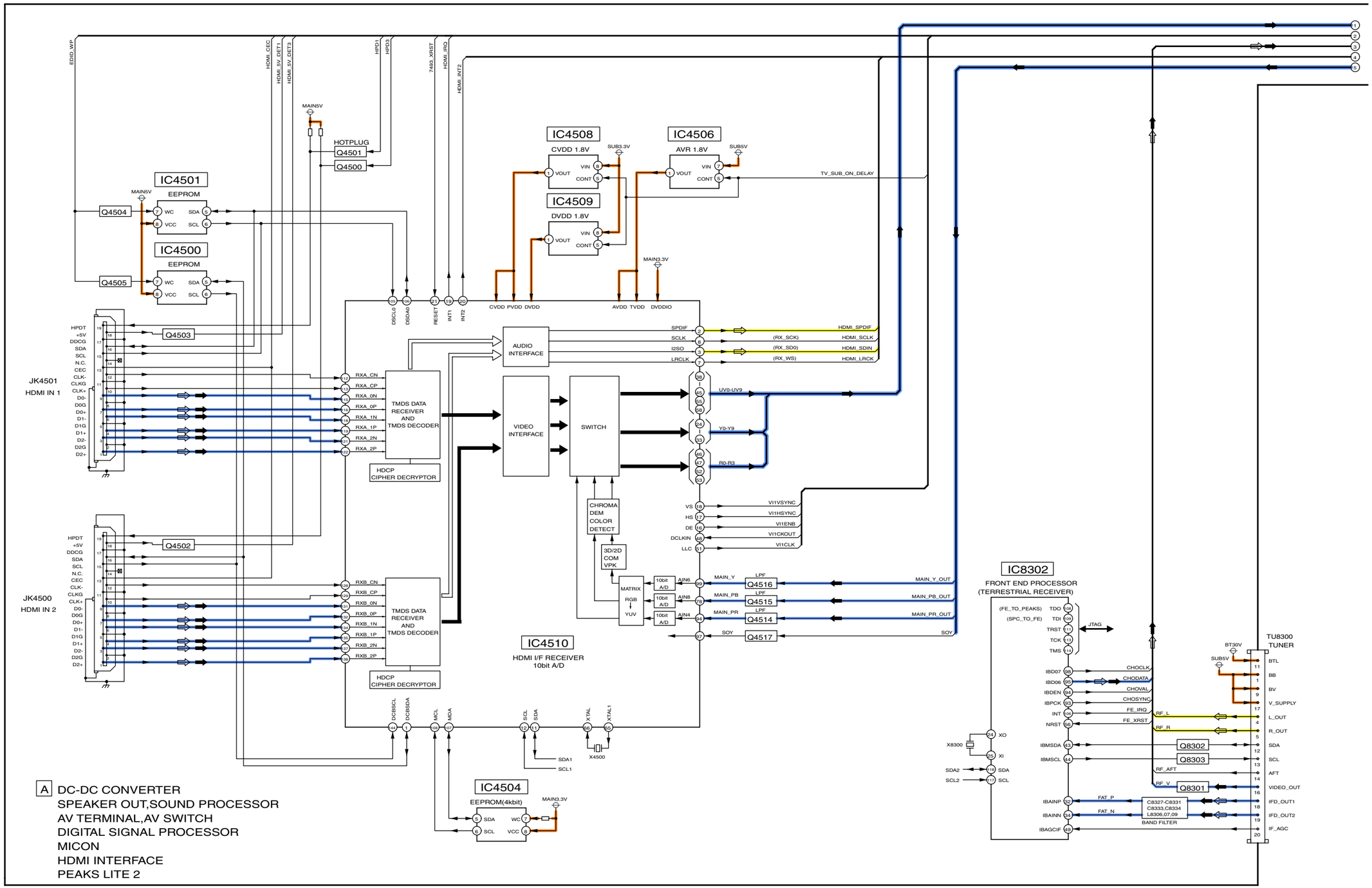


A DC-DC CONVERTER
SPEAKER OUT,SOUND PROCESSOR
AV TERMINAL,AV SWITCH
DIGITAL SIGNAL PROCESSOR
MICON
HDMI INTERFACE
PEAKS LITE 2



TH-42PX77U/PE77U
A-Board (1 of 5) Block Diagram

# 15.12. A-Board (2 of 5) Block Diagram

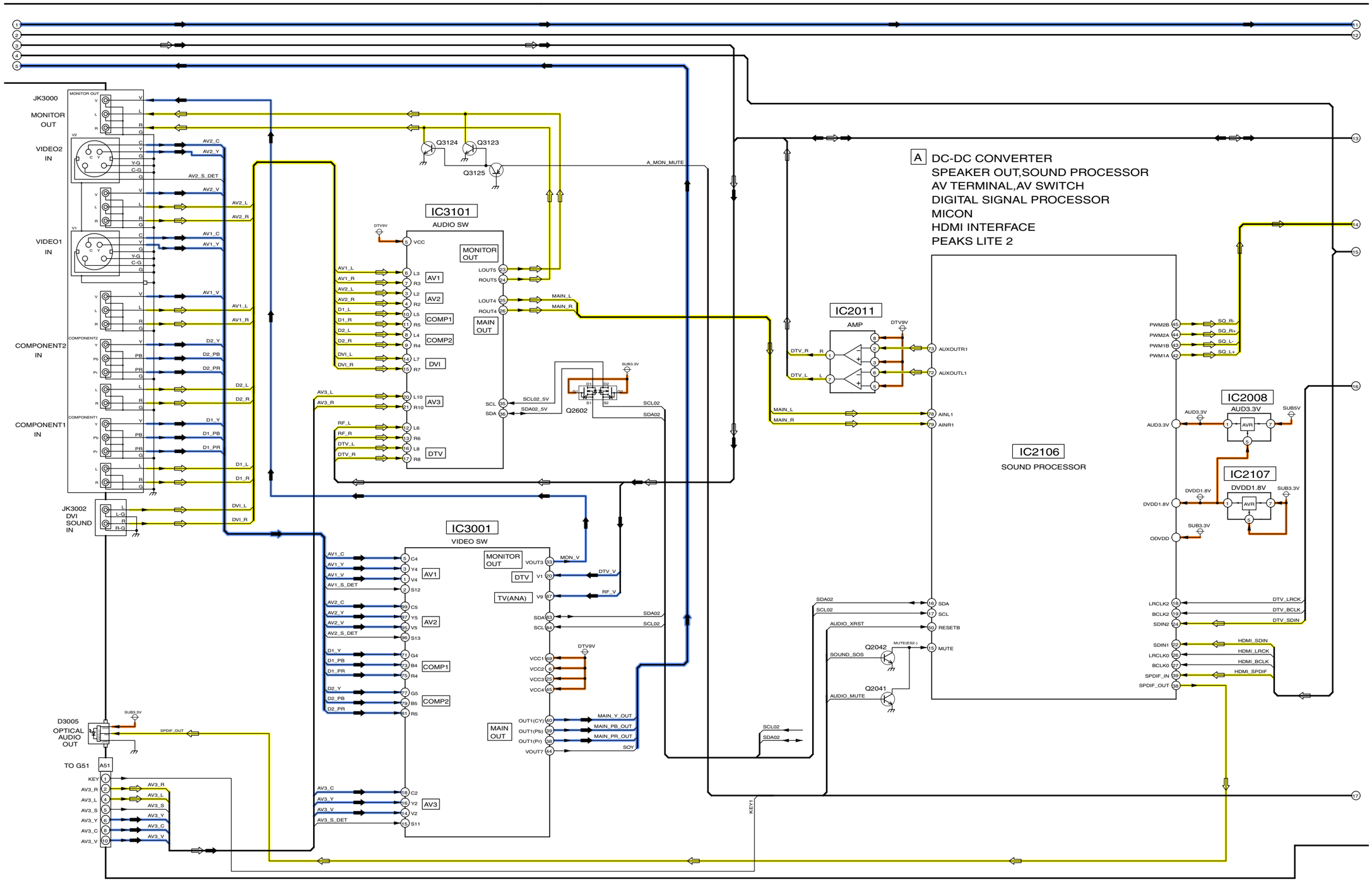


TH-42PX77U/PE77U
A-Board (2 of 5) Block Diagram

TH-42PX77U/PE77U
A-Board (2 of 5) Block Diagram

# 15.13. A-Board (3 of 5) Block Diagram

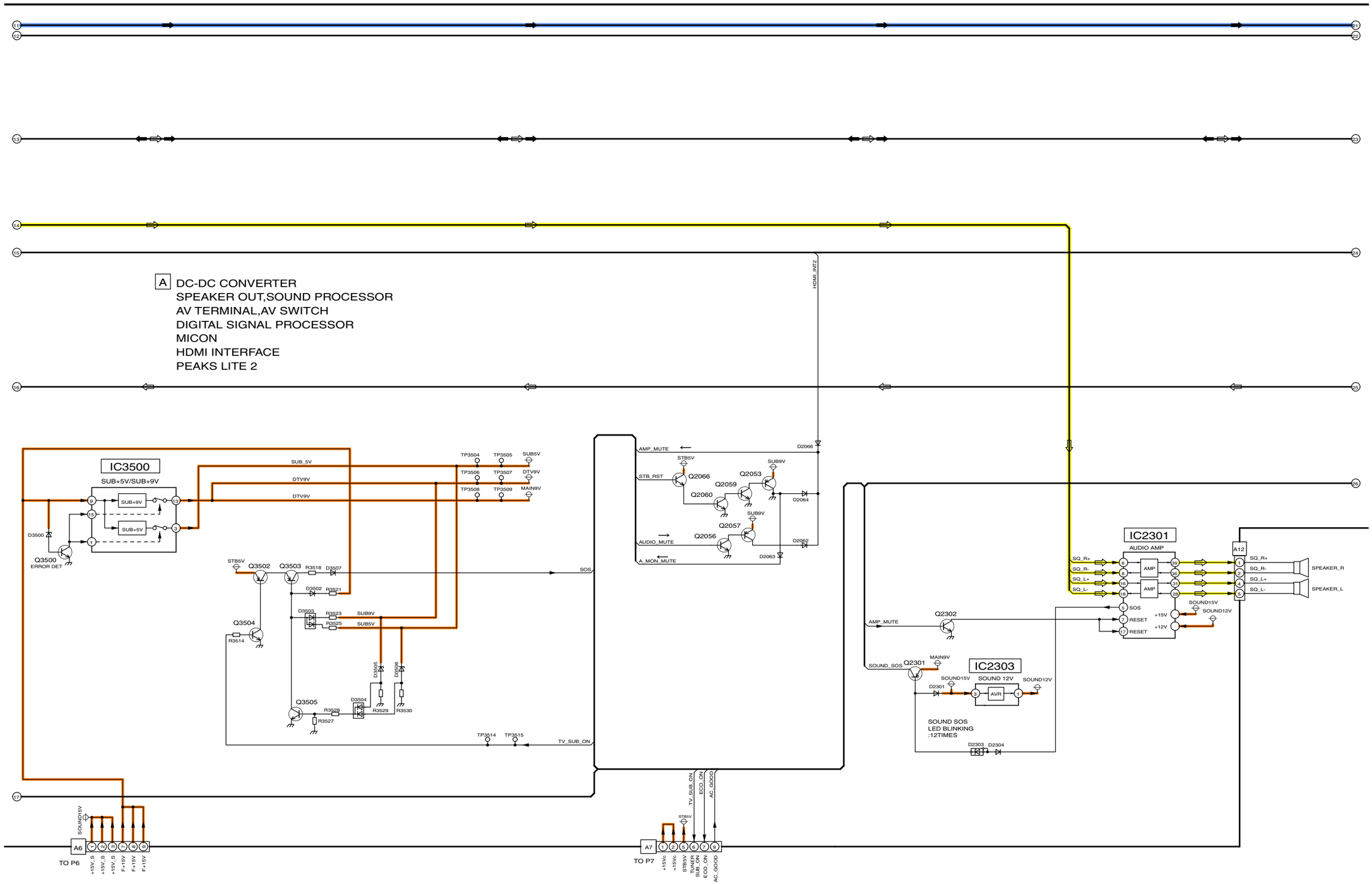


TH-42PX77U/PE77U
A-Board (3 of 5) Block Diagram

TH-42PX77U/PE77U
A-Board (3 of 5) Block Diagram

# 15.14. A-Board (4 of 5) Block Diagram

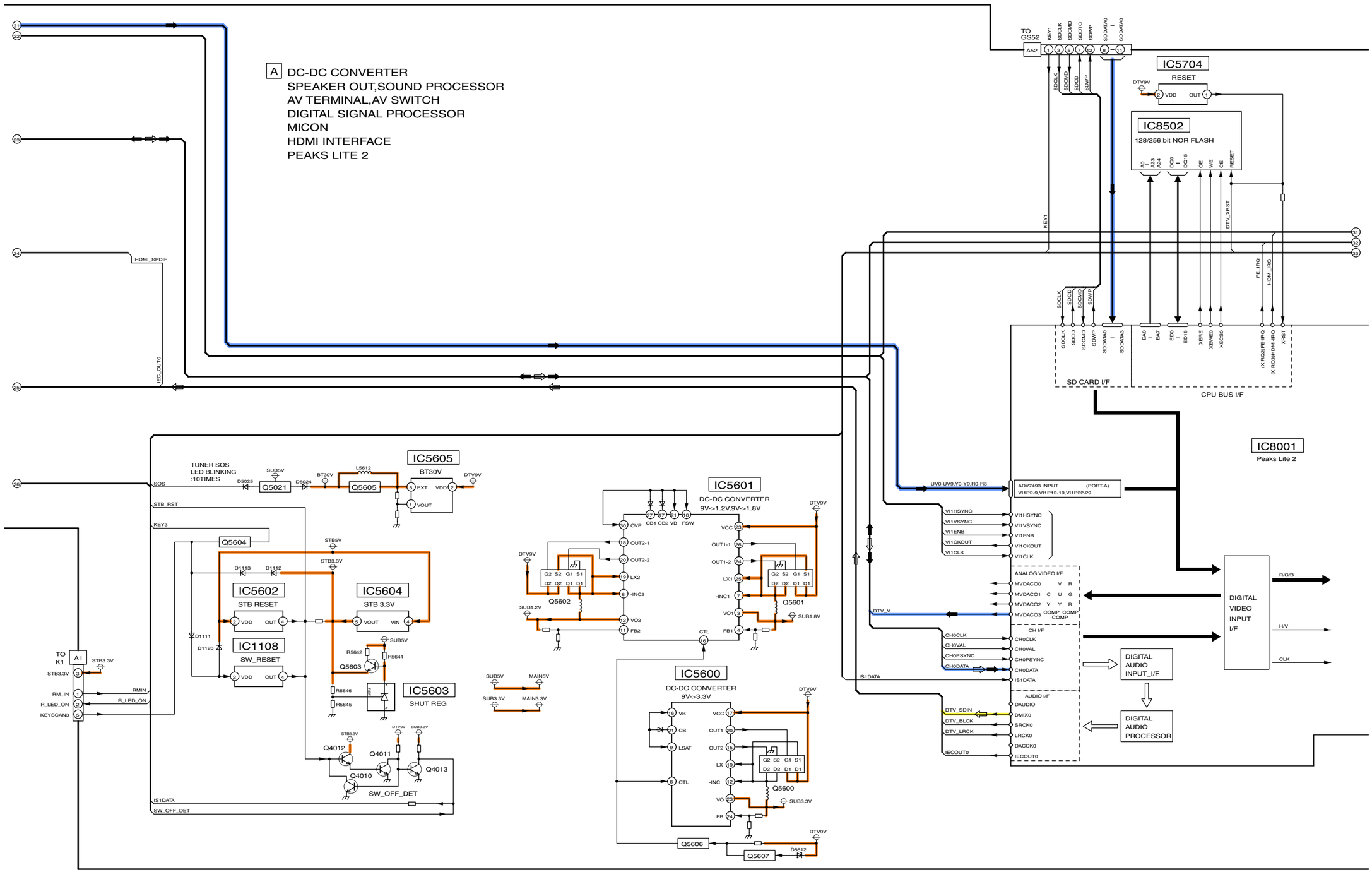


TH-42PX77U/PE77U
A-Board (4 of 5) Block Diagram

TH-42PX77U/PE77U
A-Board (4 of 5) Block Diagram

# 15.15. A-Board (5 of 5) Block Diagram

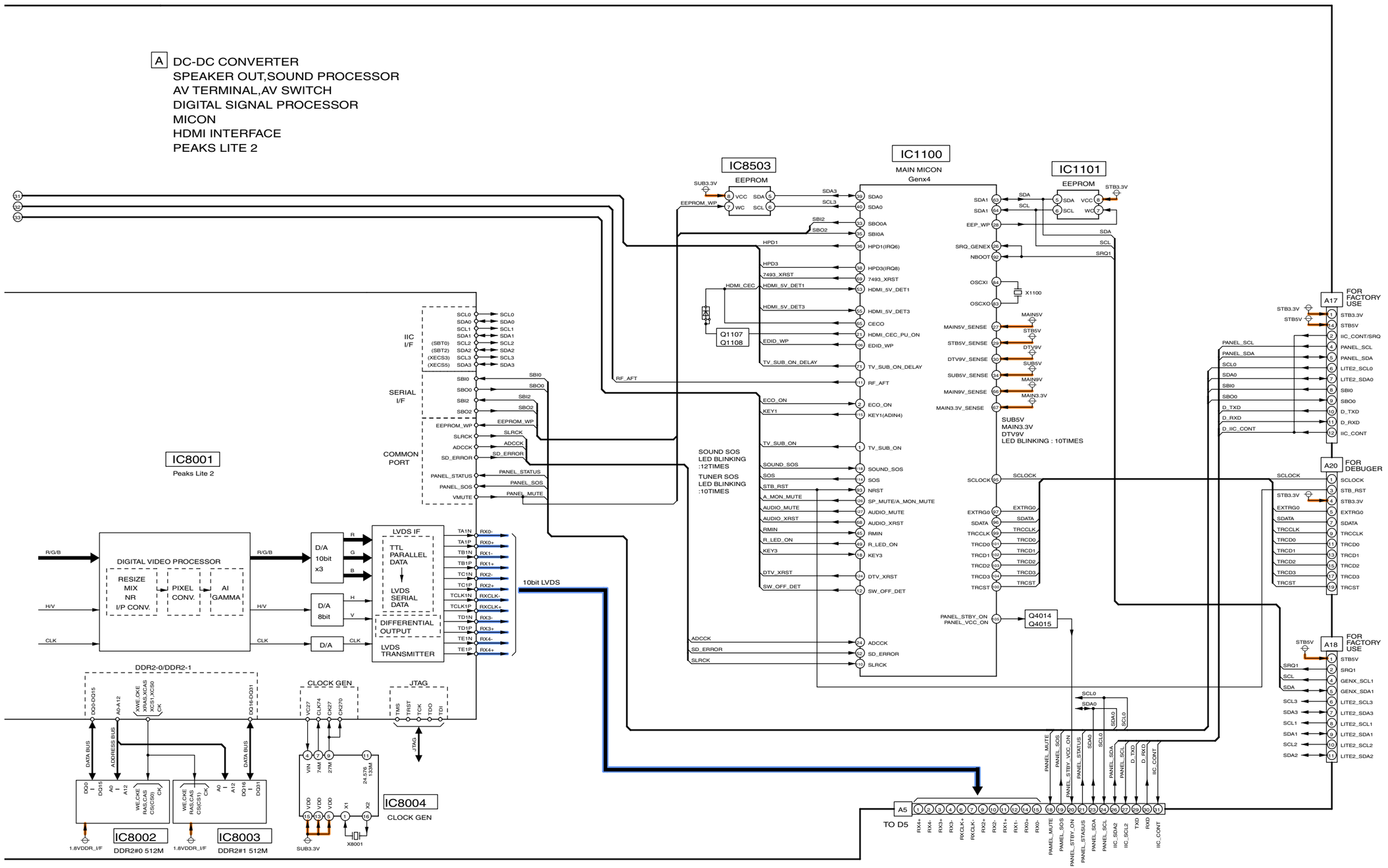


TH-42PX77U/PE77U
A-Board (5 of 5) Block Diagram

TH-42PX77U/PE77U
A-Board (5 of 5) Block Diagram

# 15.16. A-Board (1 of 12) Schematic Diagram

A-BOARD TNPH0692AES (1/12)

Peaks-Lite2,DDR

IC8001
MN2WS0039A
Peaks Lite 2

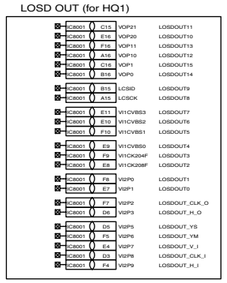


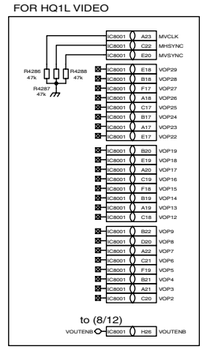


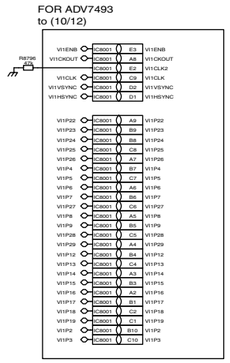


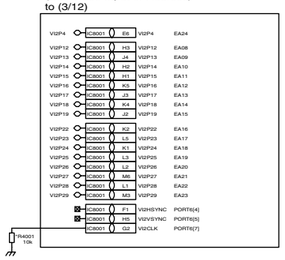


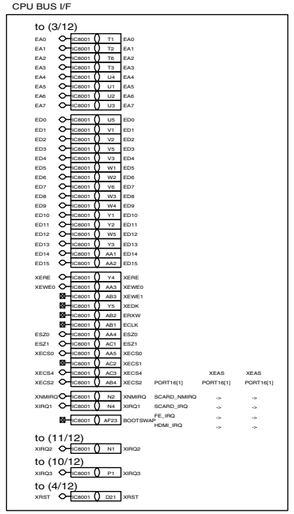


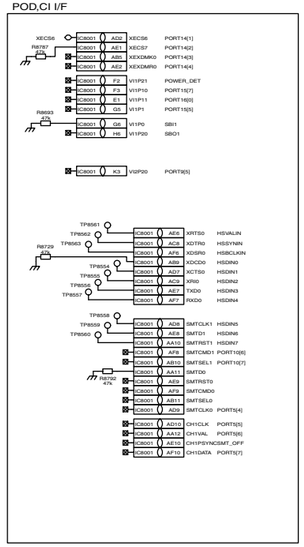


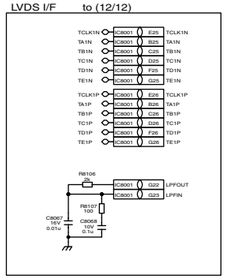


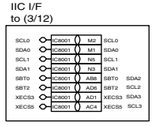


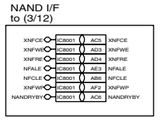


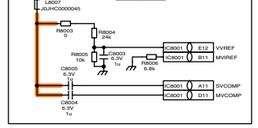

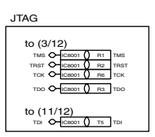


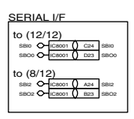


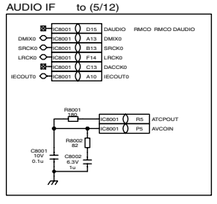


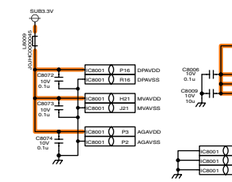

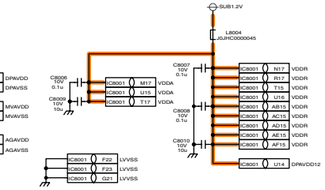

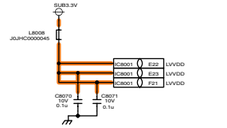

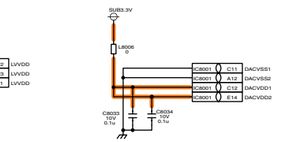

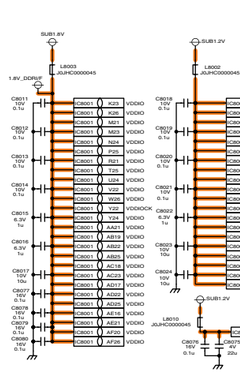

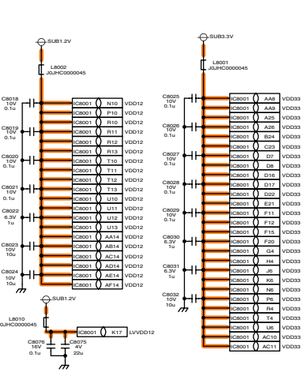

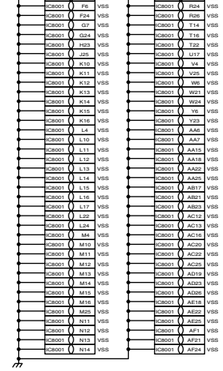

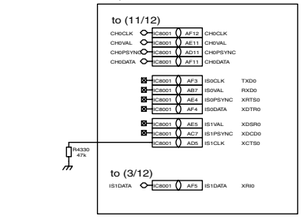


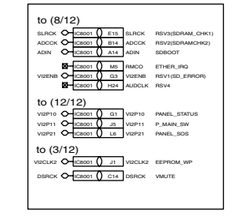


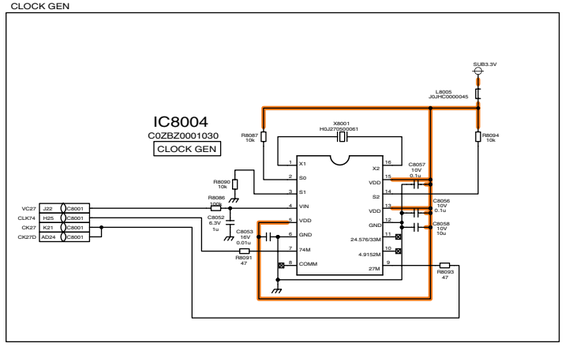


TH-42PX77U/PE77U
A-Board (1 of 12) Schematic Diagram

TH-42PX77U/PE77U
A-Board (1 of 12) Schematic Diagram

# 15.17. A-Board (2 of 12) Schematic Diagram

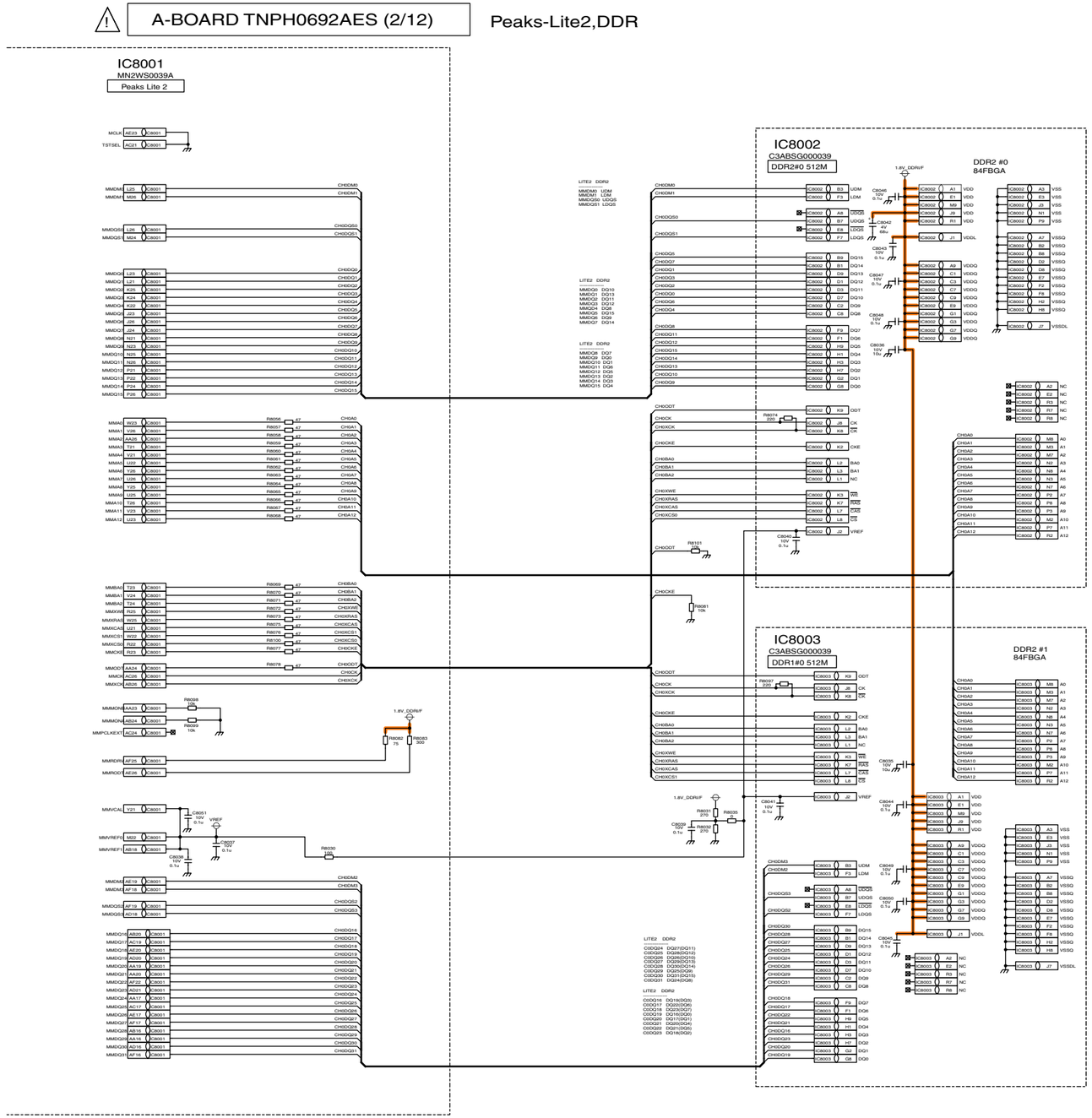

# 15.18. A-Board (3 of 12) Schematic Diagram

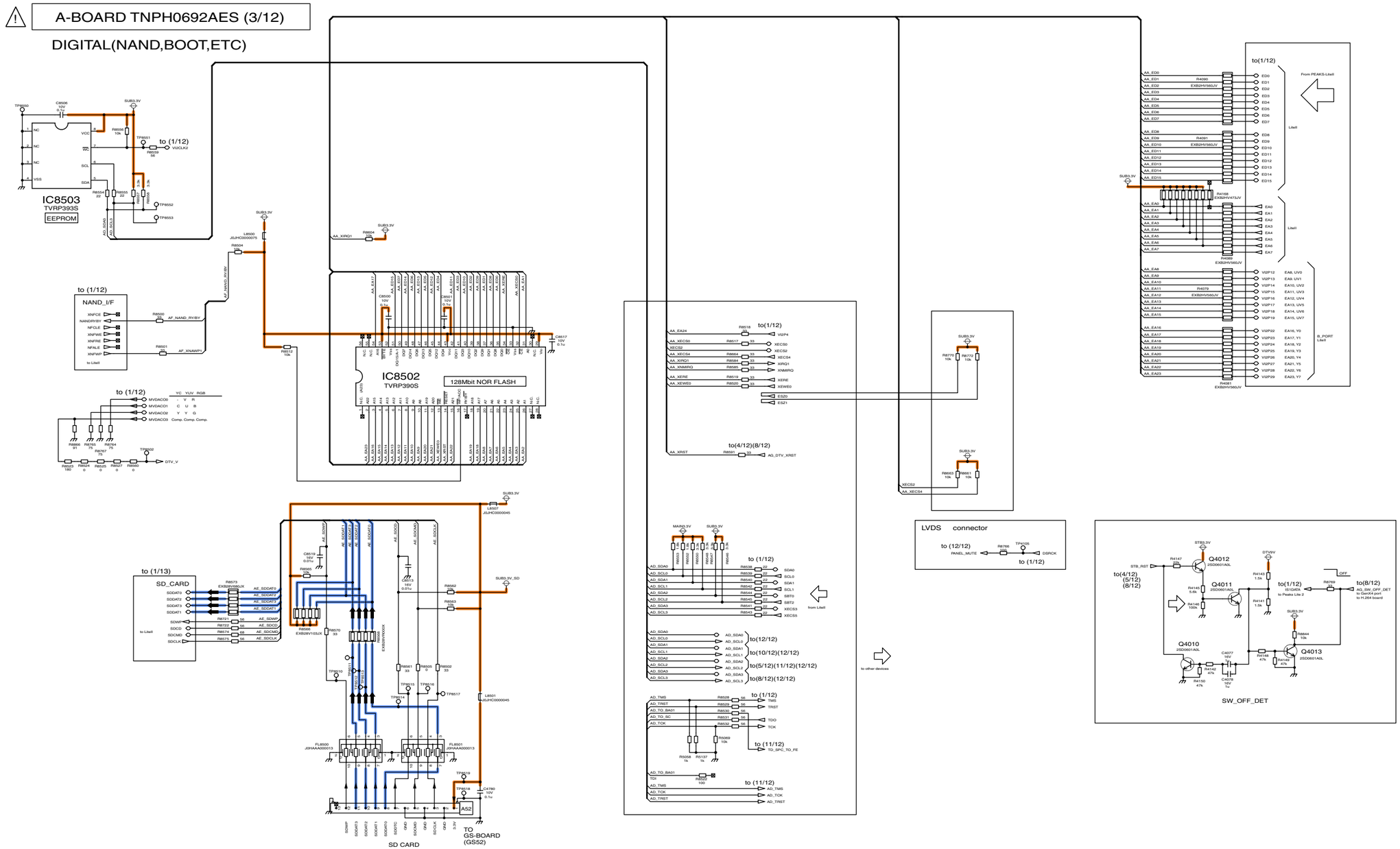




TH-42PX77U/PE77U
A-Board (3 of 12) Schematic Diagram

# 15.19. A-Board (4 of 12) Schematic Diagram

⚠ A-BOARD TNPH0692AES (4/12)

POWER SUPPLY

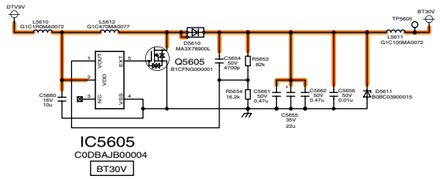


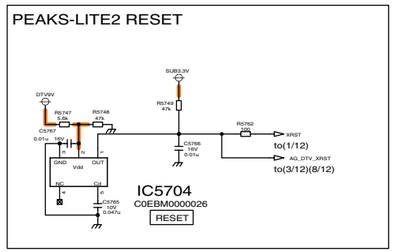


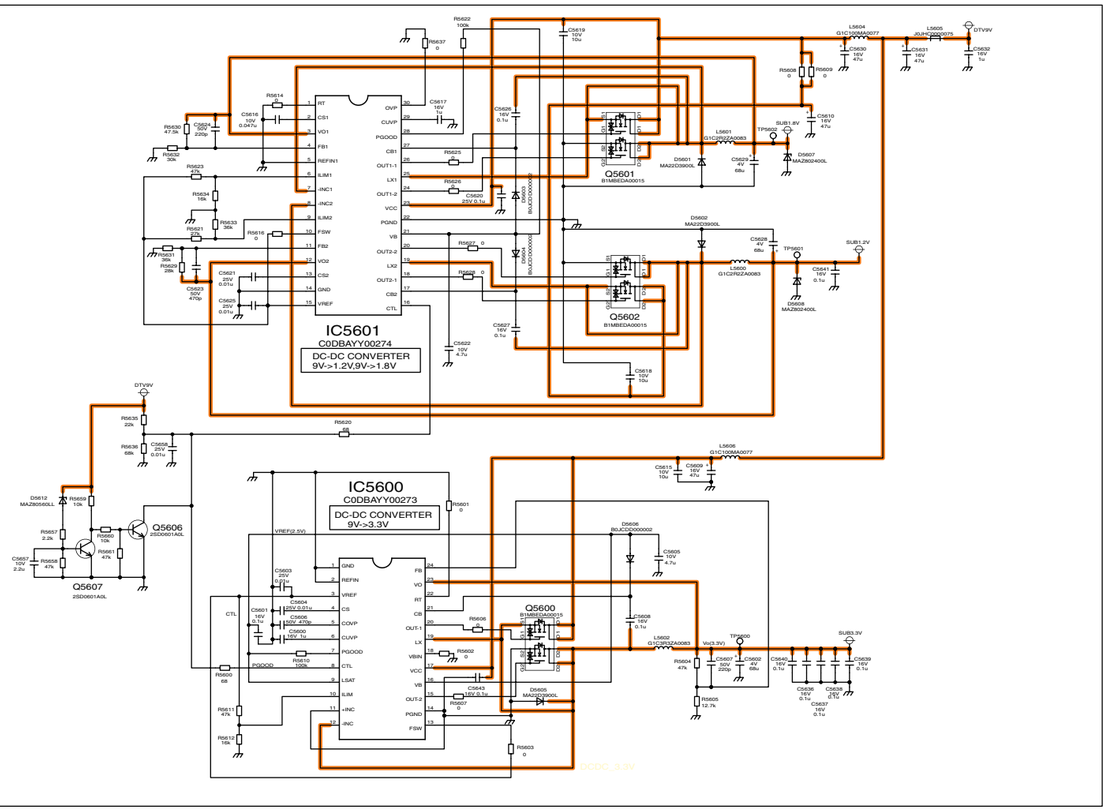


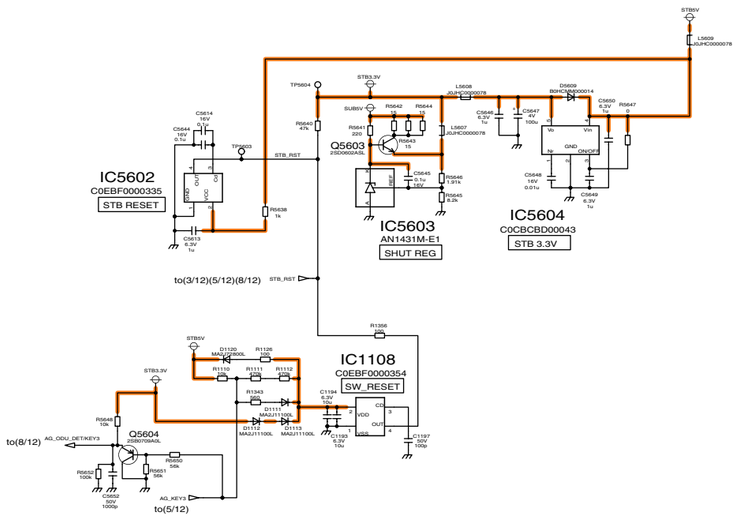


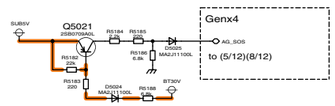

TH-42PX77U/PE77U
A-Board (4 of 12) Schematic Diagram

TH-42PX77U/PE77U
A-Board (4 of 12) Schematic Diagram

28 29 30 31 32 33 34 35 36

# 15.20. A-Board (5 of 12) Schematic Diagram

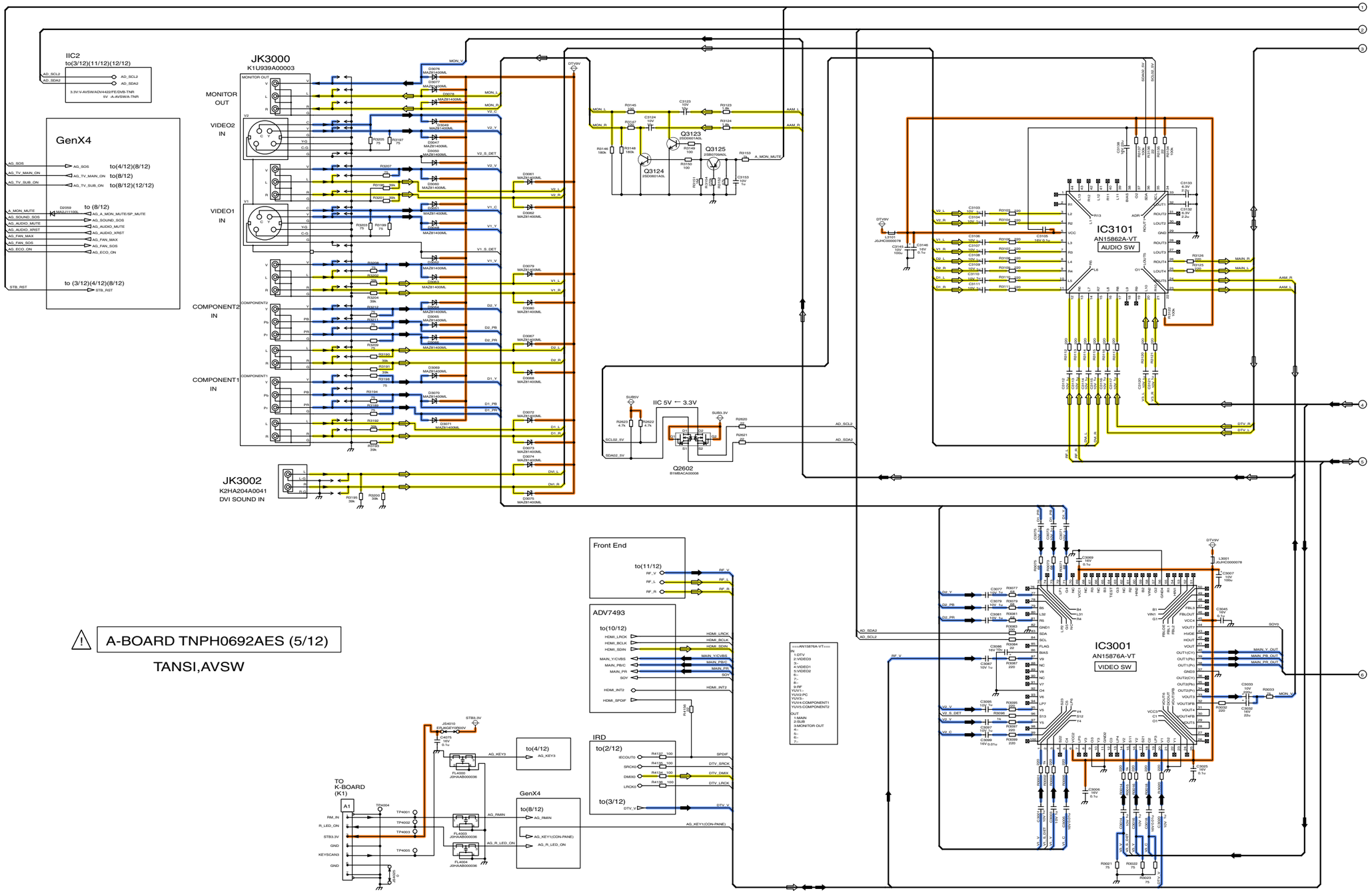


TH-42PX77U/PE77U
A-Board (5 of 12) Schematic Diagram

TH-42PX77U/PE77U
A-Board (5 of 12) Schematic Diagram

37 38 39 40 41 42 43 44 45

# 15.21. A-Board (6 of 12) Schematic Diagram

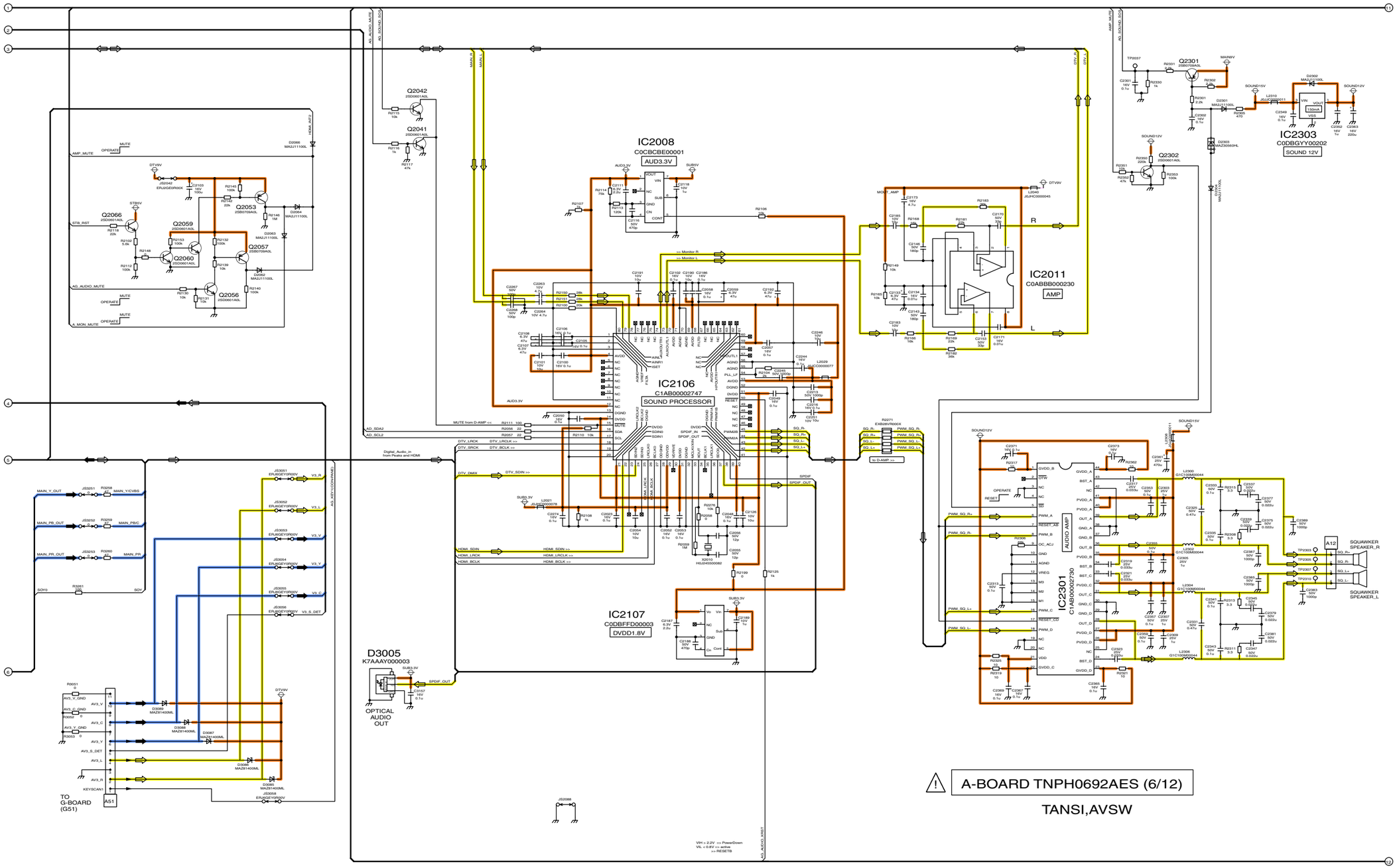

# 15.22. A-Board (7 of 12) Schematic Diagram

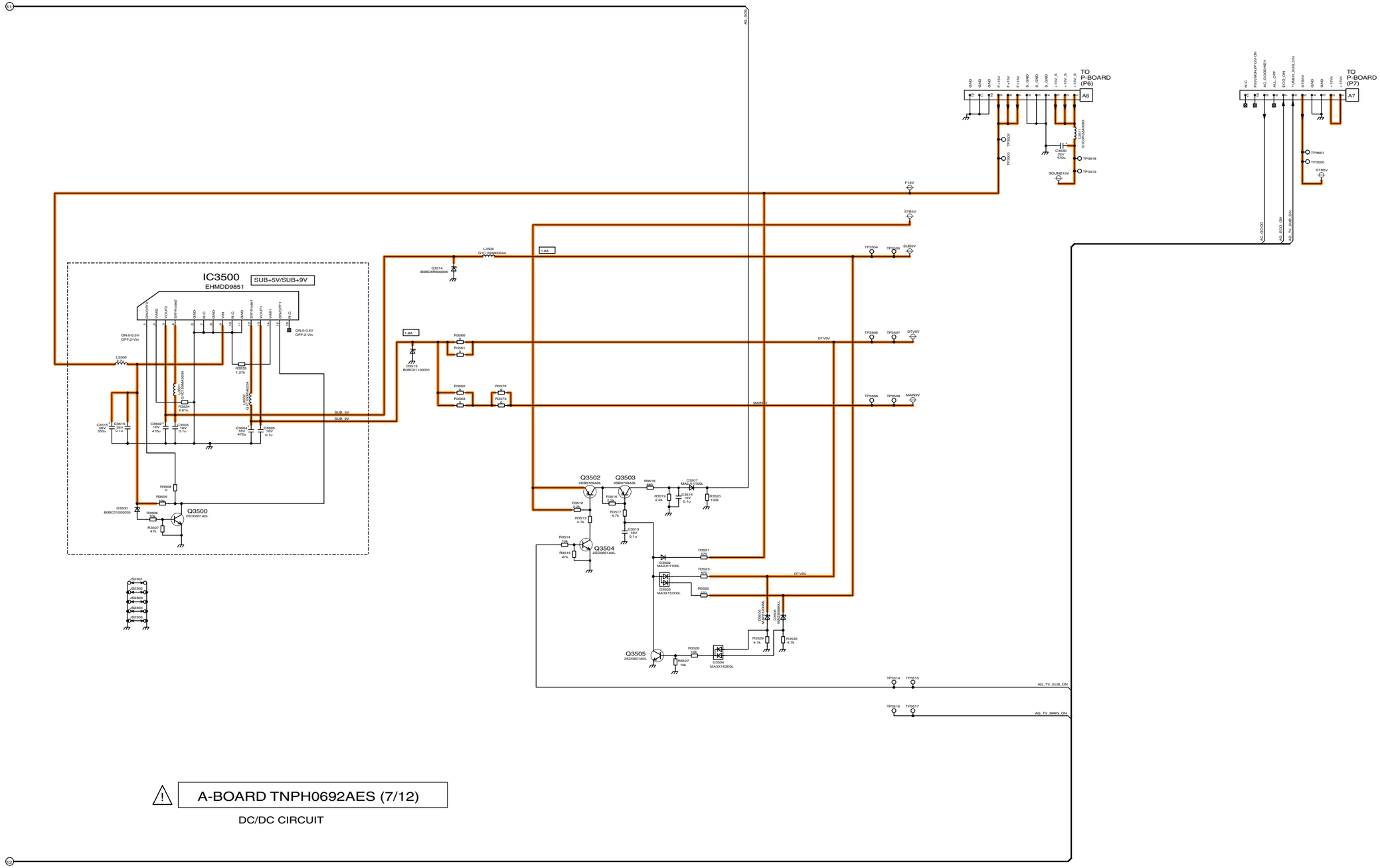


⚠ A-BOARD TNPH0692AES (7/12)

DC/DC CIRCUIT

# 15.23. A-Board (8 of 12) Schematic Diagram

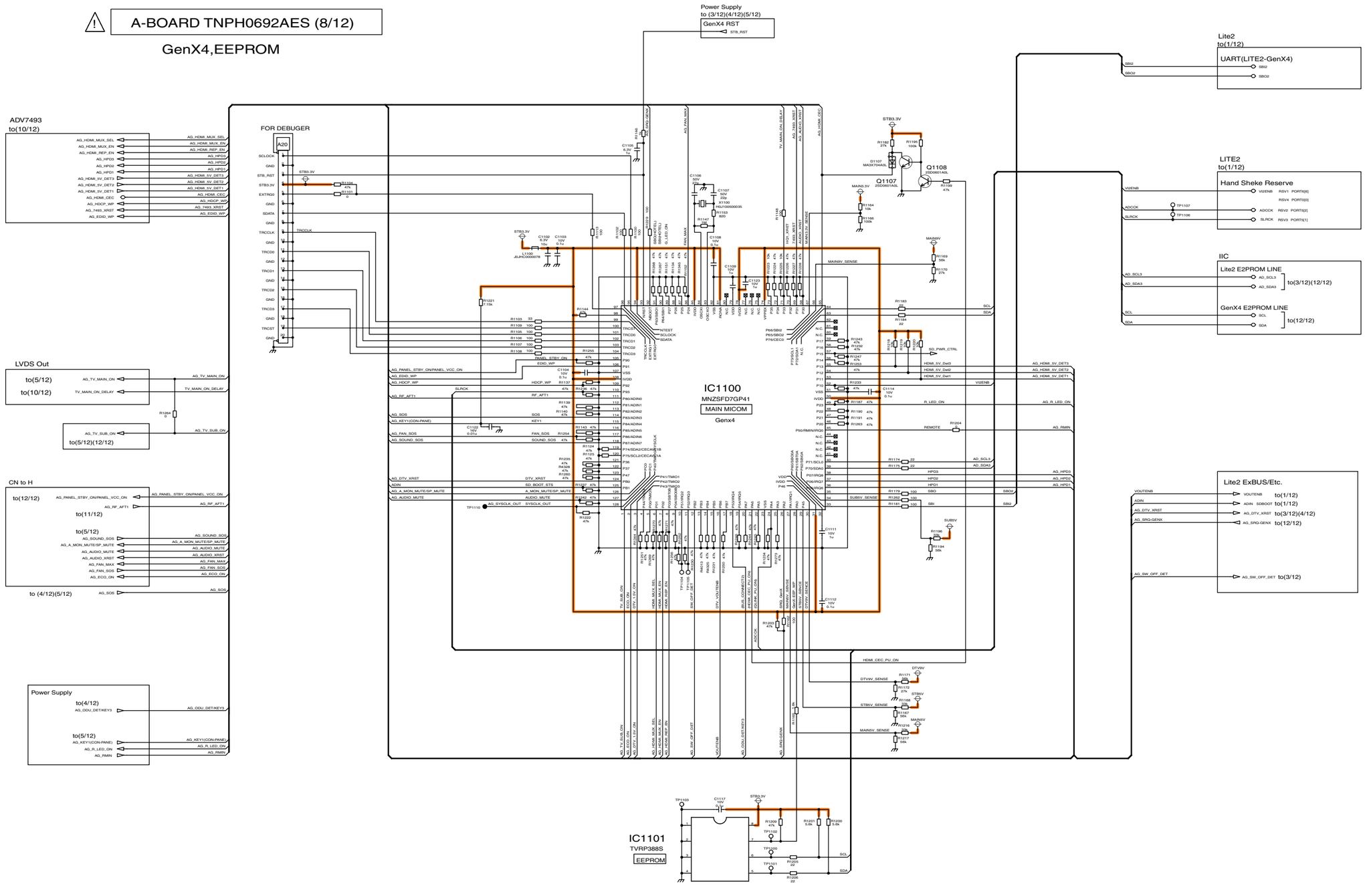

# 15.24. A-Board (9 of 12) Schematic Diagram

⚠ A-BOARD TNPH0692AES (9/12)

ADV7493,HDMI-Mux

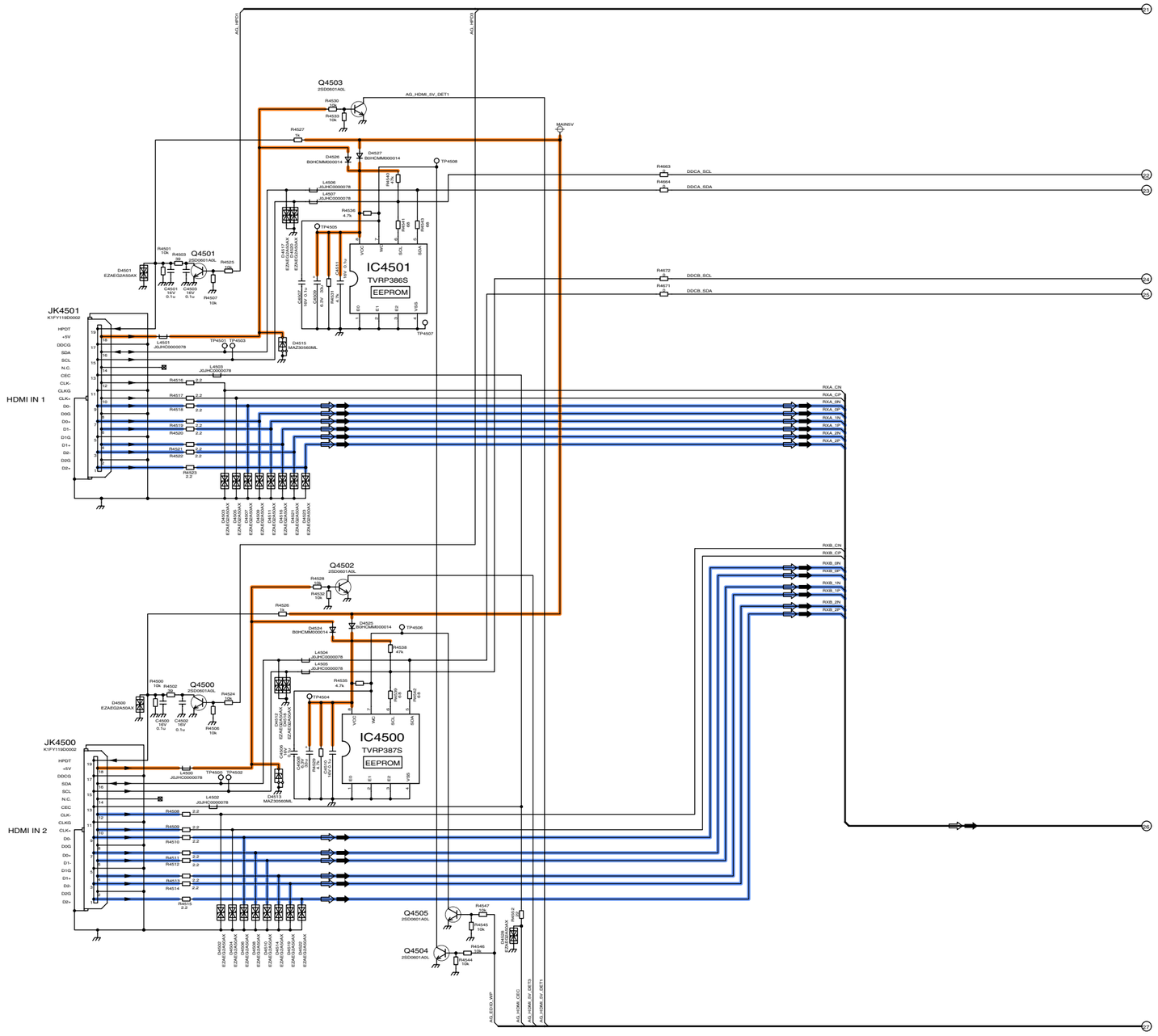

# 15.25. A-Board (10 of 12) Schematic Diagram

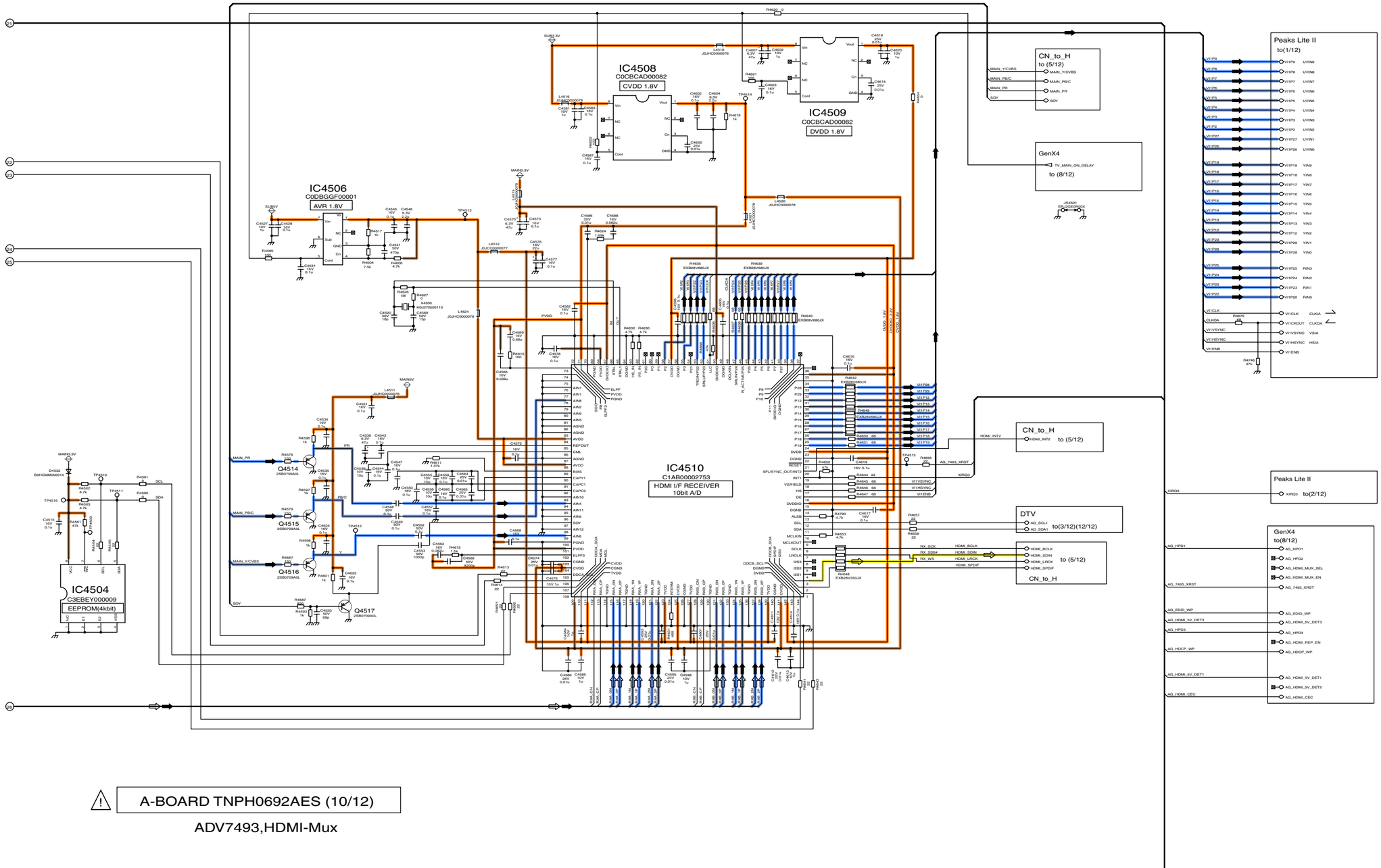


TH-42PX77U/PE77U
A-Board (10 of 12) Schematic Diagram

TH-42PX77U/PE77U
A-Board (10 of 12) Schematic Diagram

# 15.26. A-Board (11 of 12) Schematic Diagram

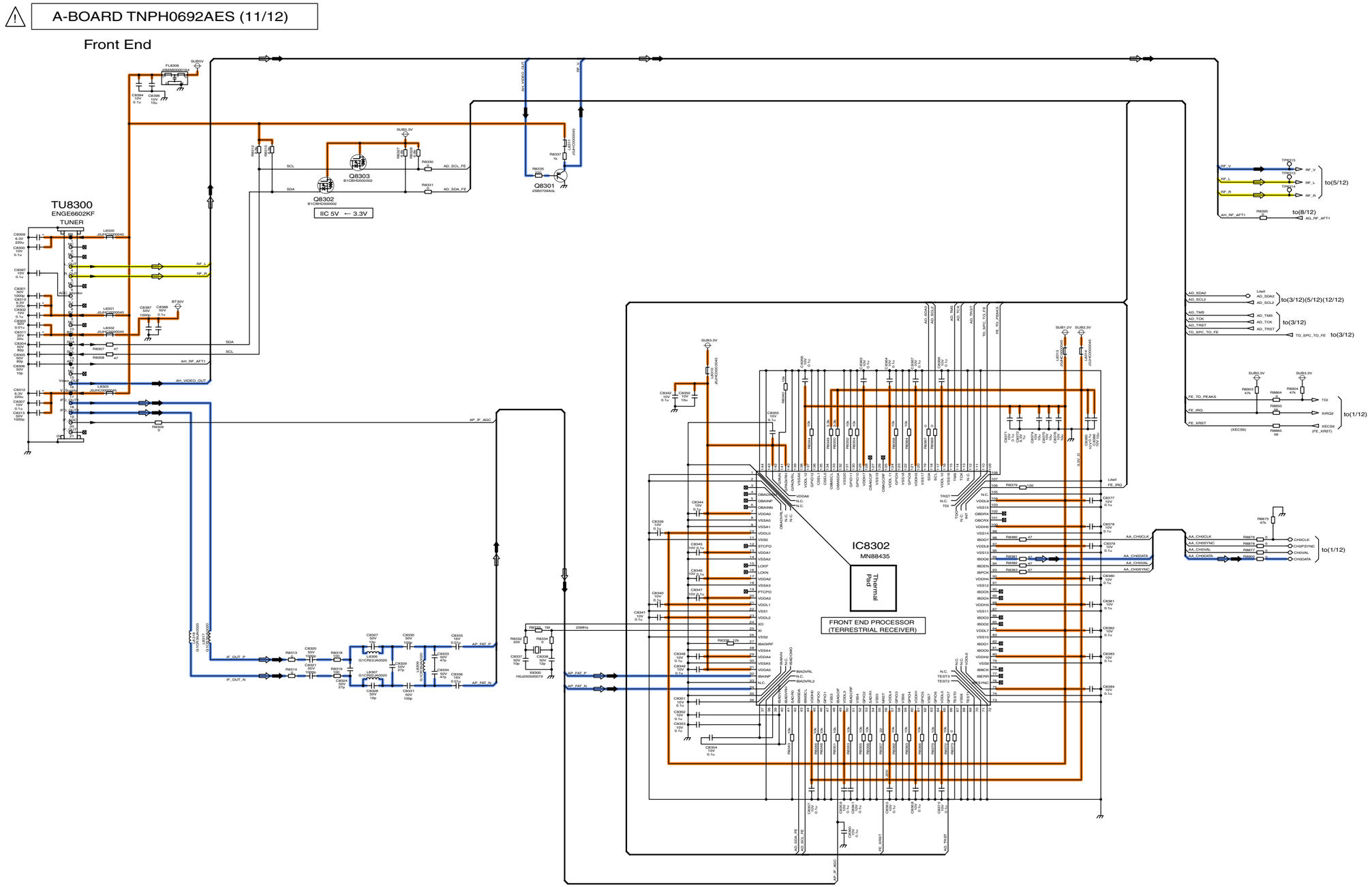


TH-42PX77U/PE77U
A-Board (11 of 12) Schematic Diagram

TH-42PX77U/PE77U
A-Board (11 of 12) Schematic Diagram

91 92 93 94 95 96 97 98 99

80

# 15.27. A-Board (12 of 12) Schematic Diagram

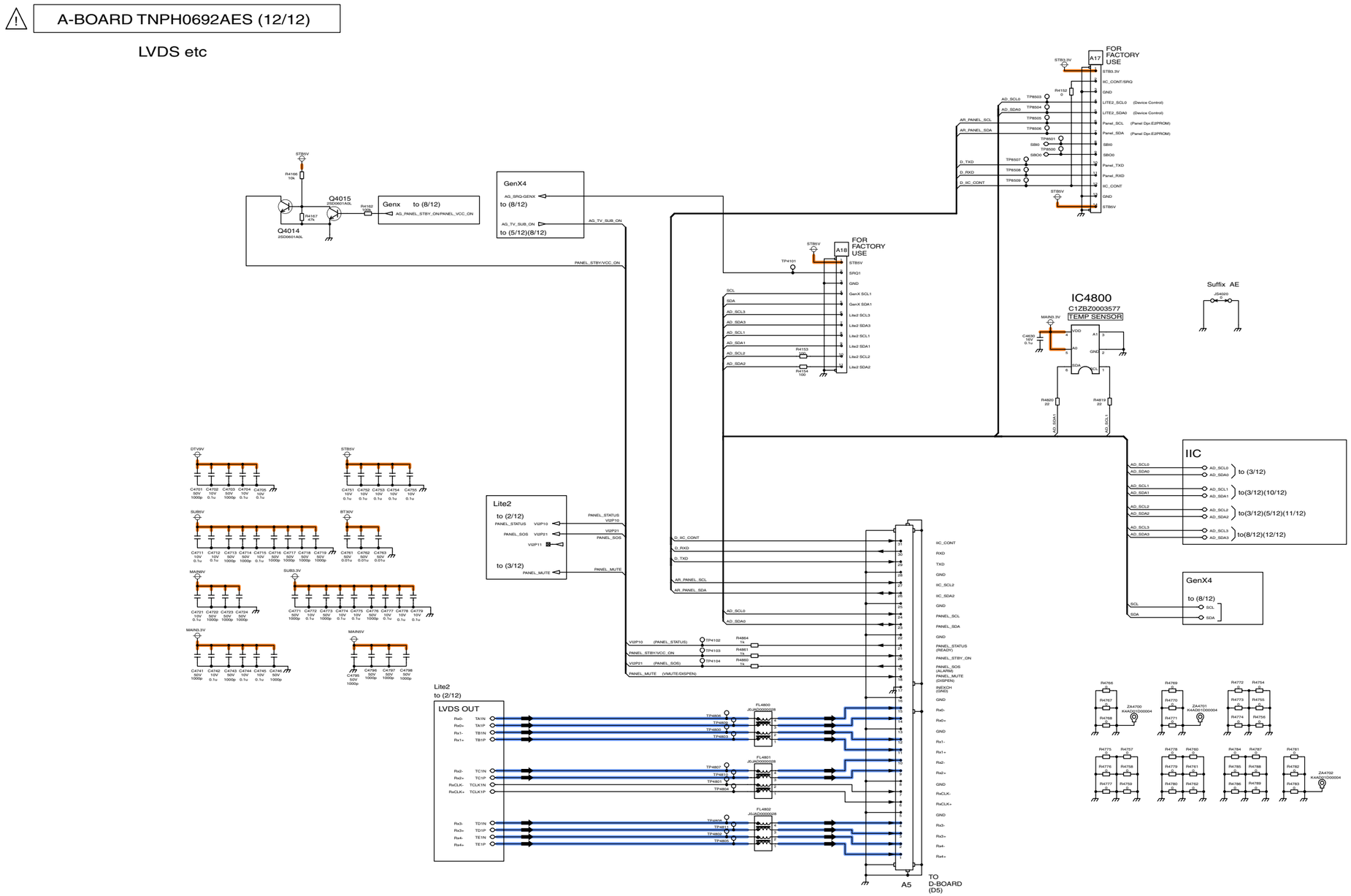

# 15.28. D-Board Block Diagram

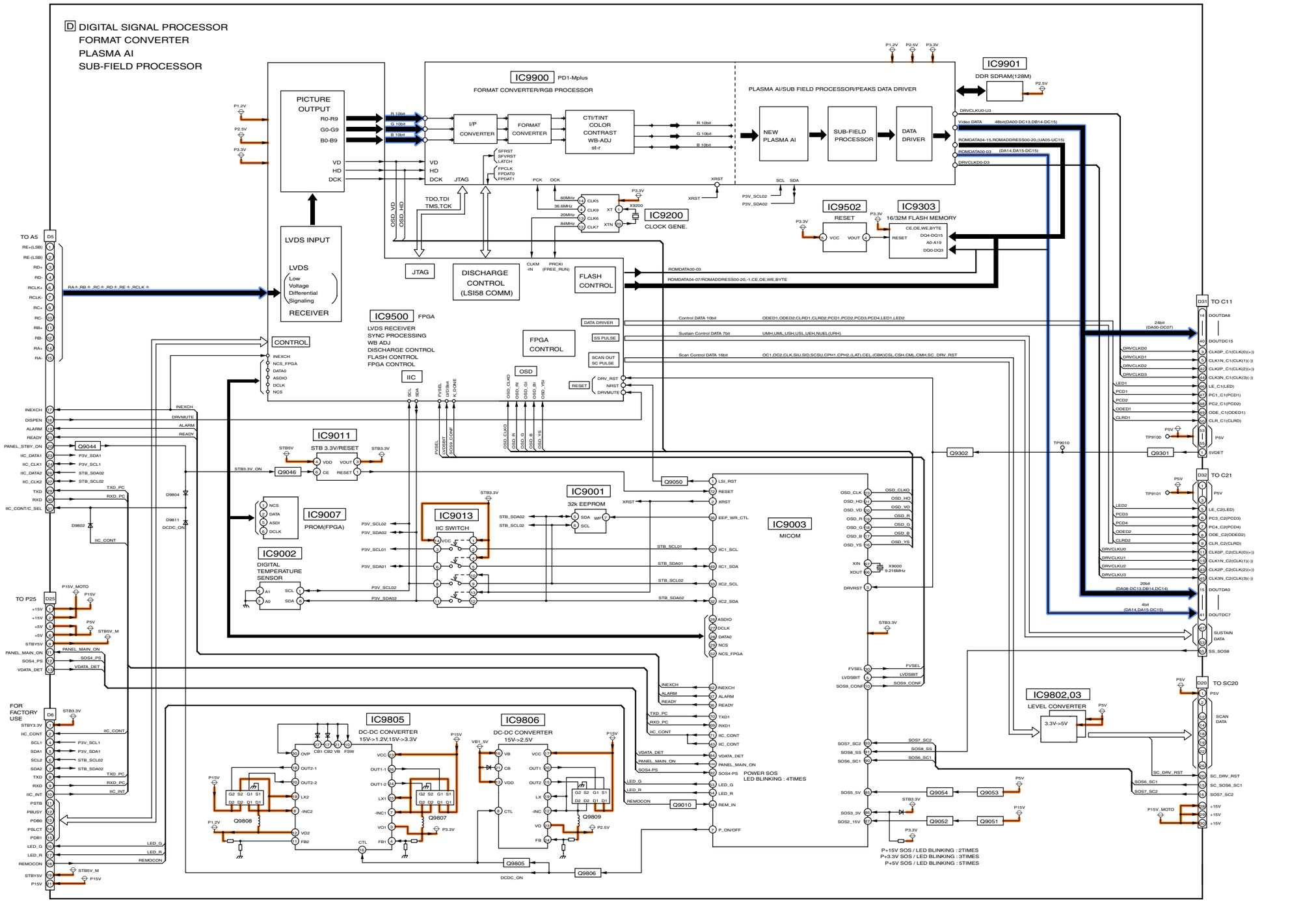


TH-42PX77U/PE77U
D-Board Block Diagram

TH-42PX77U/PE77U
D-Board Block Diagram

# 15.29. D-Board (1 of 6) Schematic Diagram

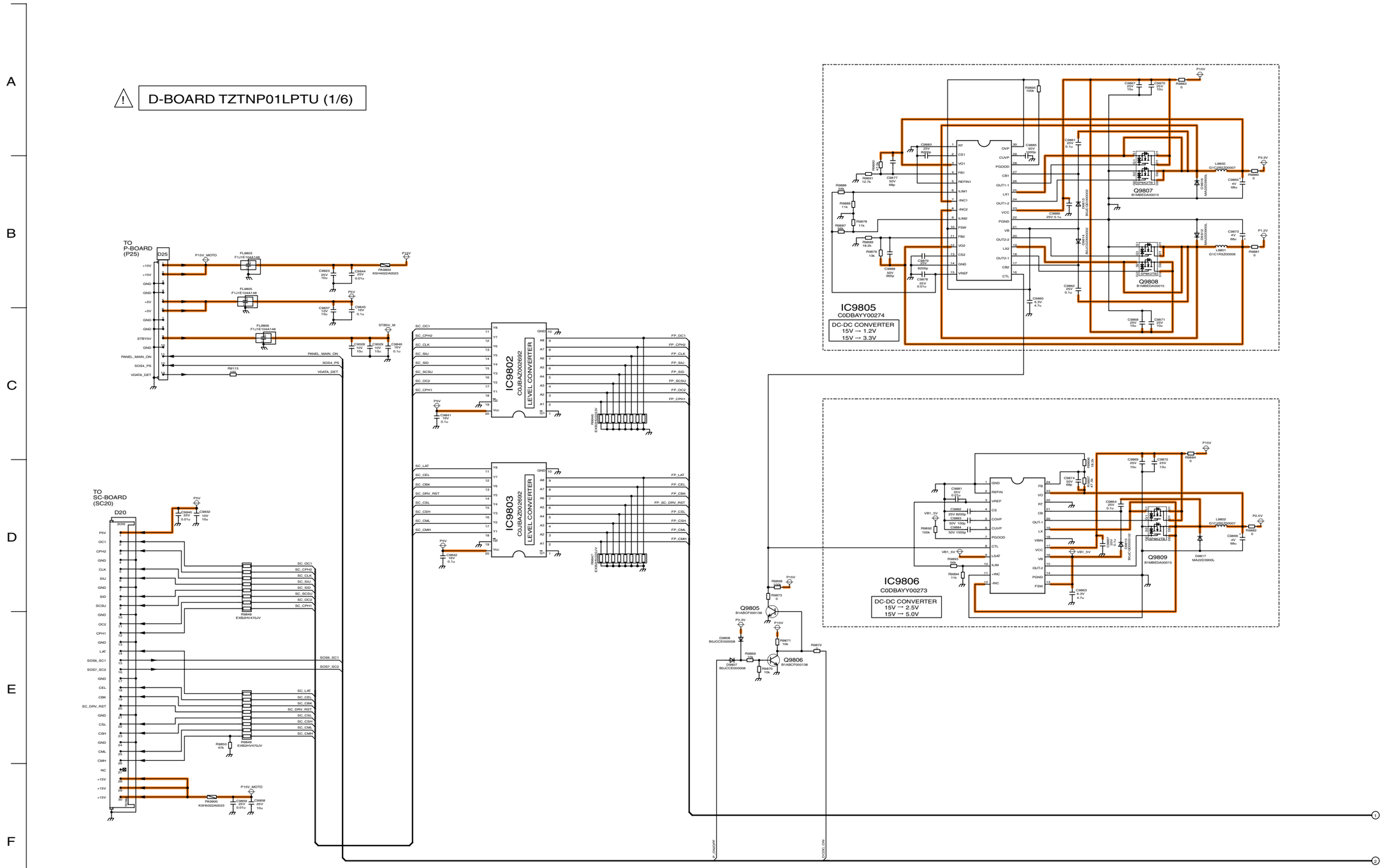


TH-42PX77U/PE77U
D-Board (1 of 6) Schematic Diagram

TH-42PX77U/PE77U
D-Board (1 of 6) Schematic Diagram

# 15.30. D-Board (2 of 6) Schematic Diagram

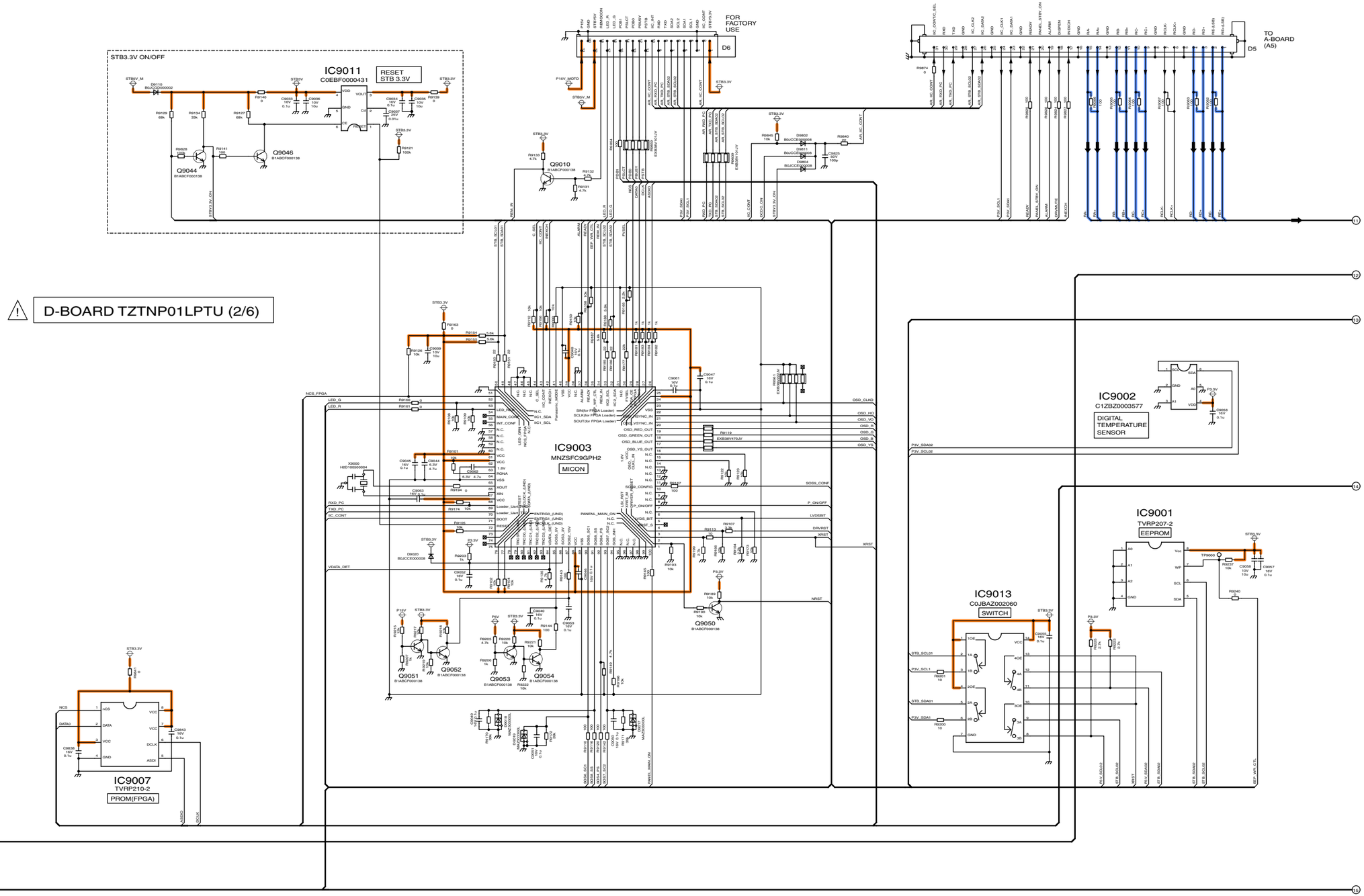


TH-42PX77U/PE77U
D-Board (2 of 6) Schematic Diagram

TH-42PX77U/PE77U
D-Board (2 of 6) Schematic Diagram

10 11 12 13 14 15 16 17 18

# 15.31. D-Board (3 of 6) Schematic Diagram

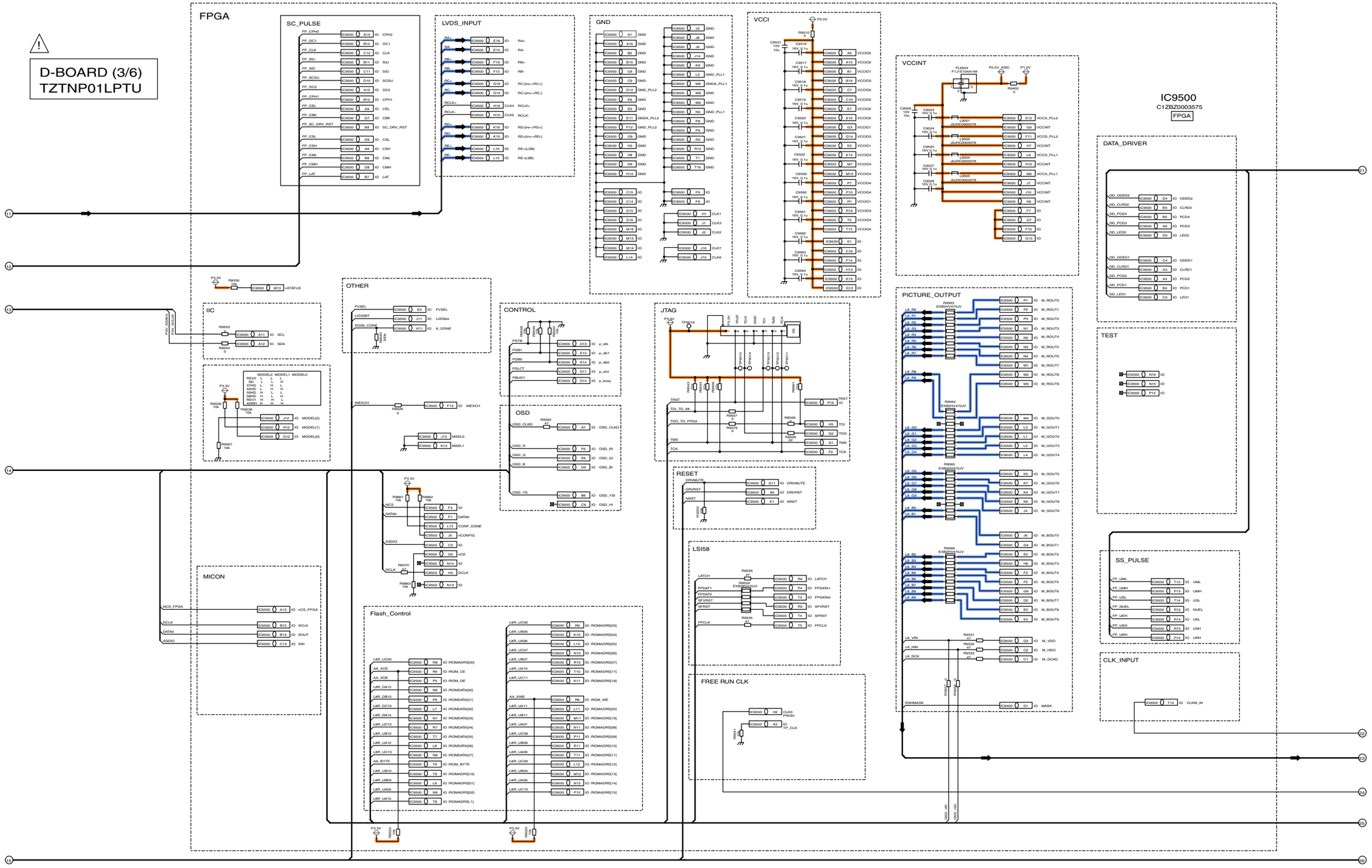

# 15.32. D-Board (4 of 6) Schematic Diagram

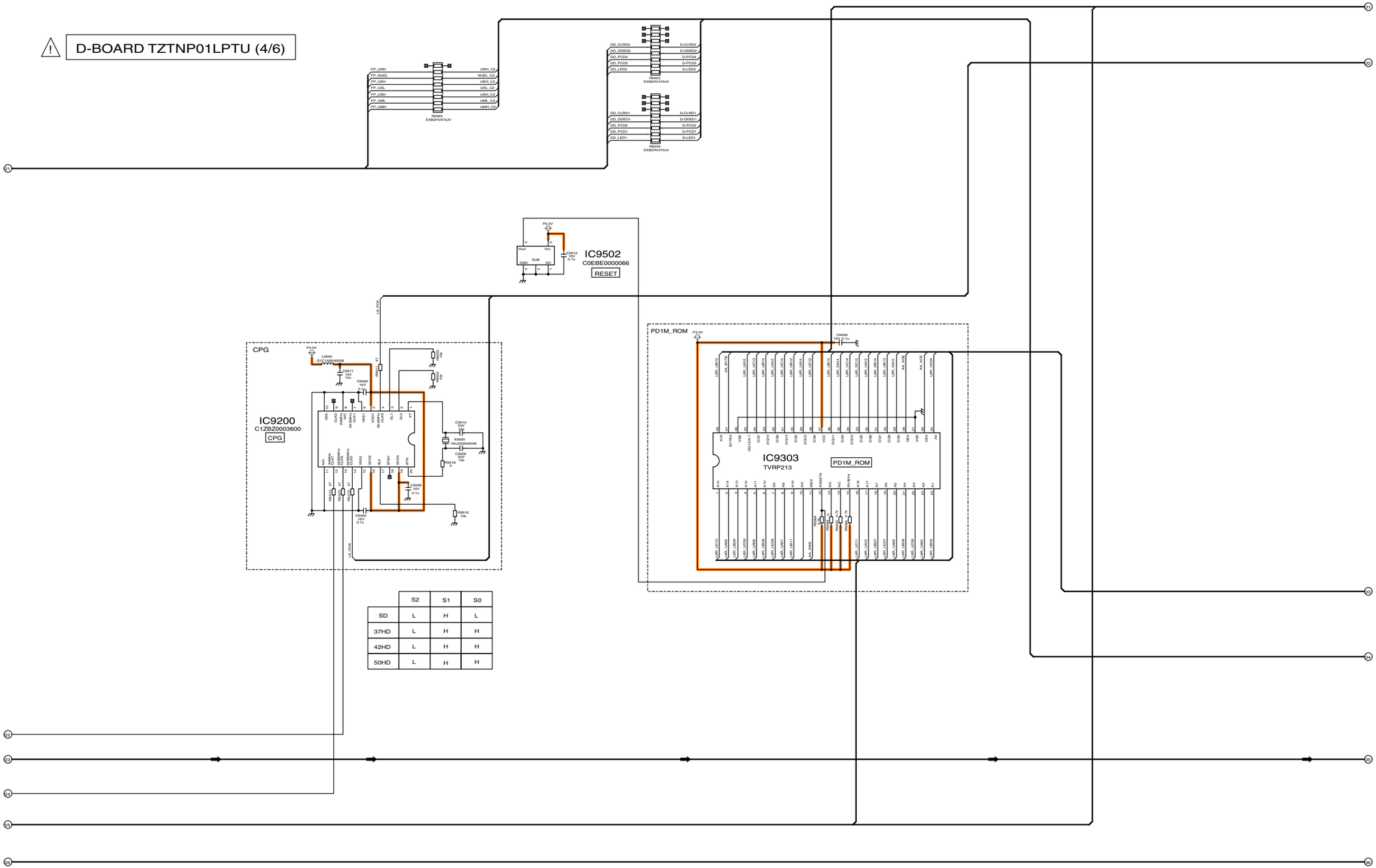

# 15.33. D-Board (5 of 6) Schematic Diagram

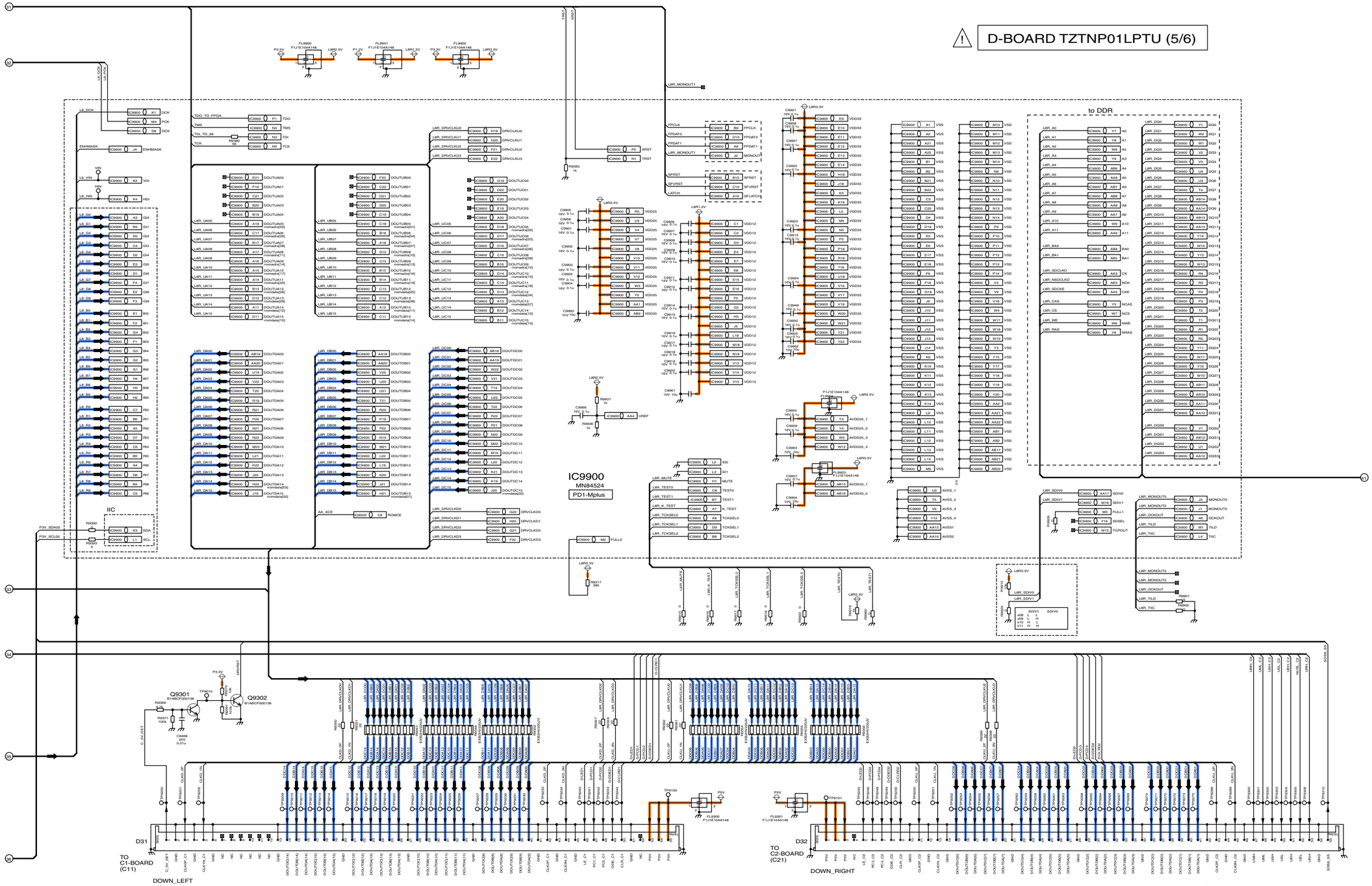


TH-42PX77U/PE77U
D-Board (5 of 6) Schematic Diagram

TH-42PX77U/PE77U
D-Board (5 of 6) Schematic Diagram

| 37 | 38 | 39 | 40 | 41 | 42 | 43 | 44 | 45 |
|---|---|---|---|---|---|---|---|---|

# 15.34. D-Board (6 of 6) Schematic Diagram

D-BOARD TZTNP01LPTU (6/6)

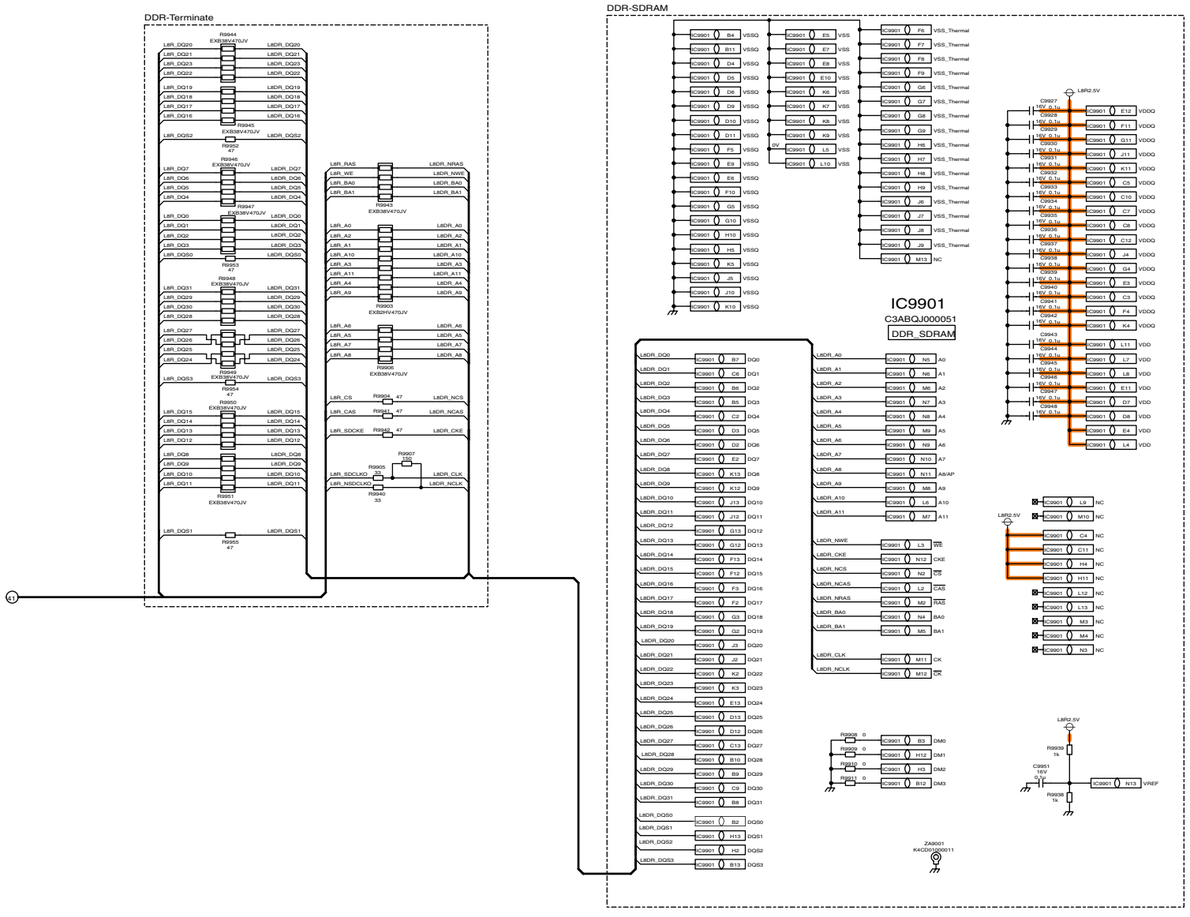

# 15.35. C1 and C2-Board Block Diagram

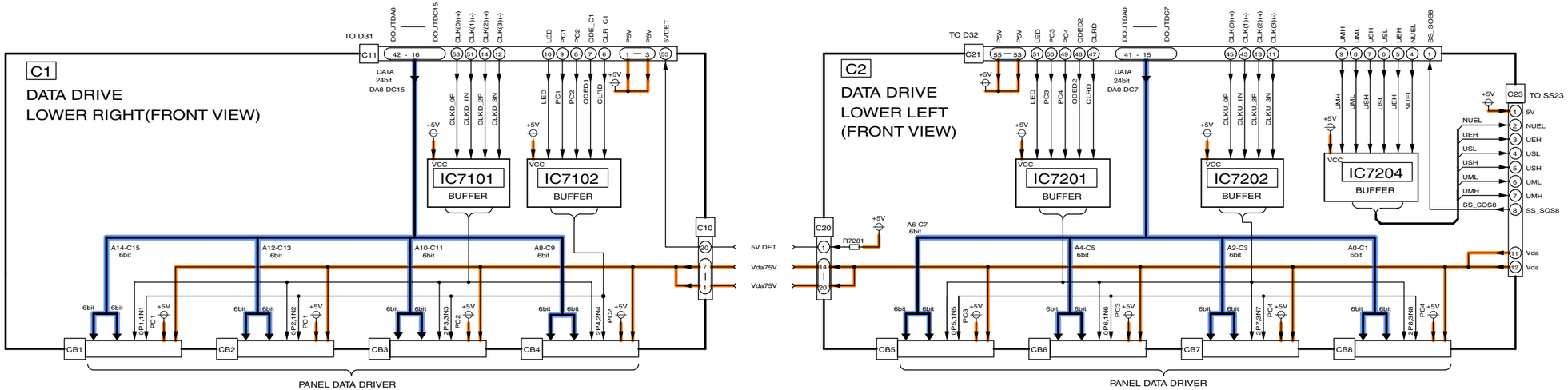




TH-42PX77U/PE77U
C1 and C2-Board Block Diagram

# 15.36. C1-Board (1 of 2) Schematic Diagram

C1-BOARD TXNC11HNTU (1/2)

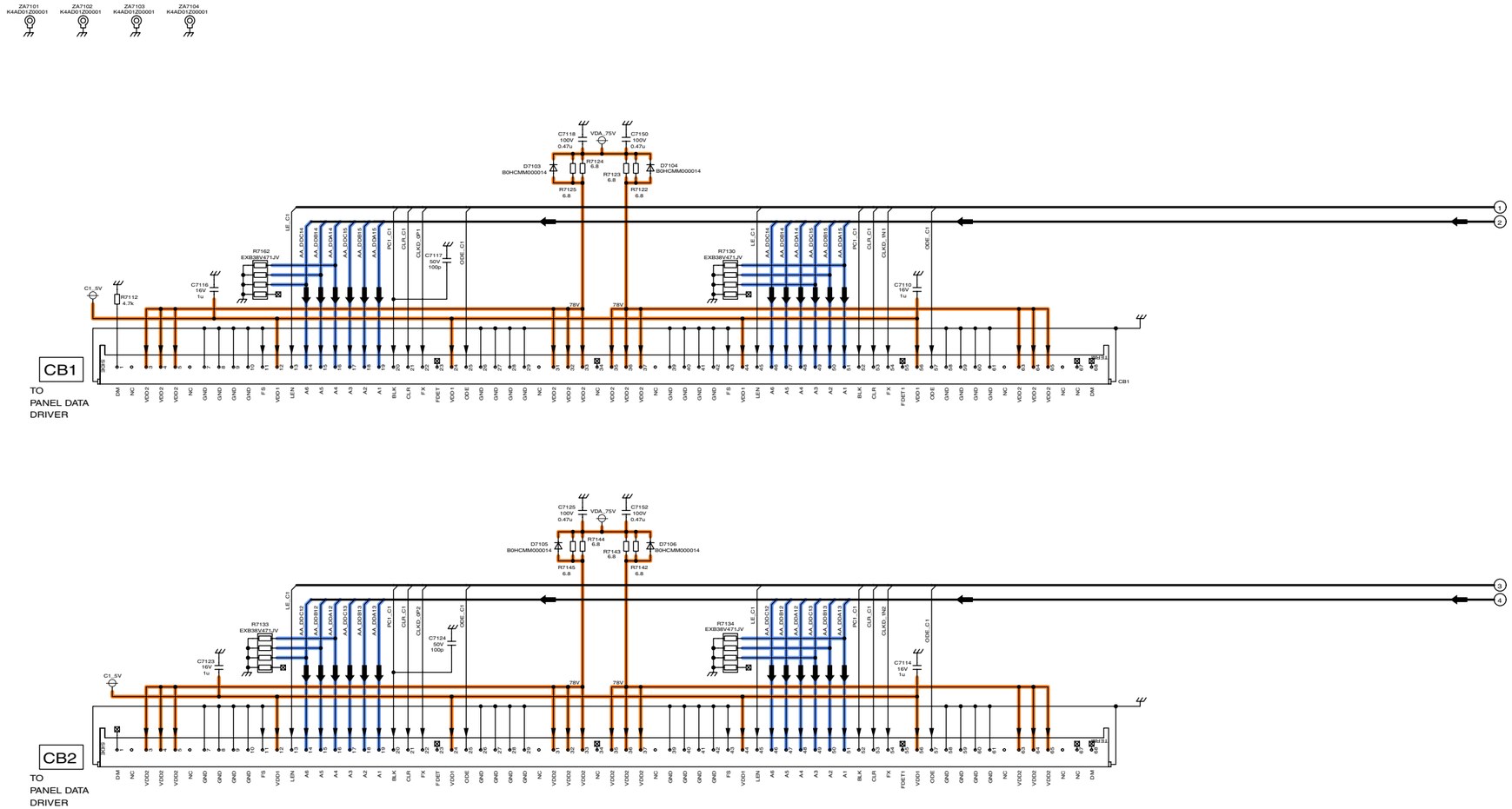


TH-42PX77U/PE77U
C1-Board (1 of 2) Schematic Diagram

TH-42PX77U/PE77U
C1-Board (1 of 2) Schematic Diagram

# 15.37. C1-Board (2 of 2) Schematic Diagram

⚠ C1-BOARD TXNC11HNTU (2/2)

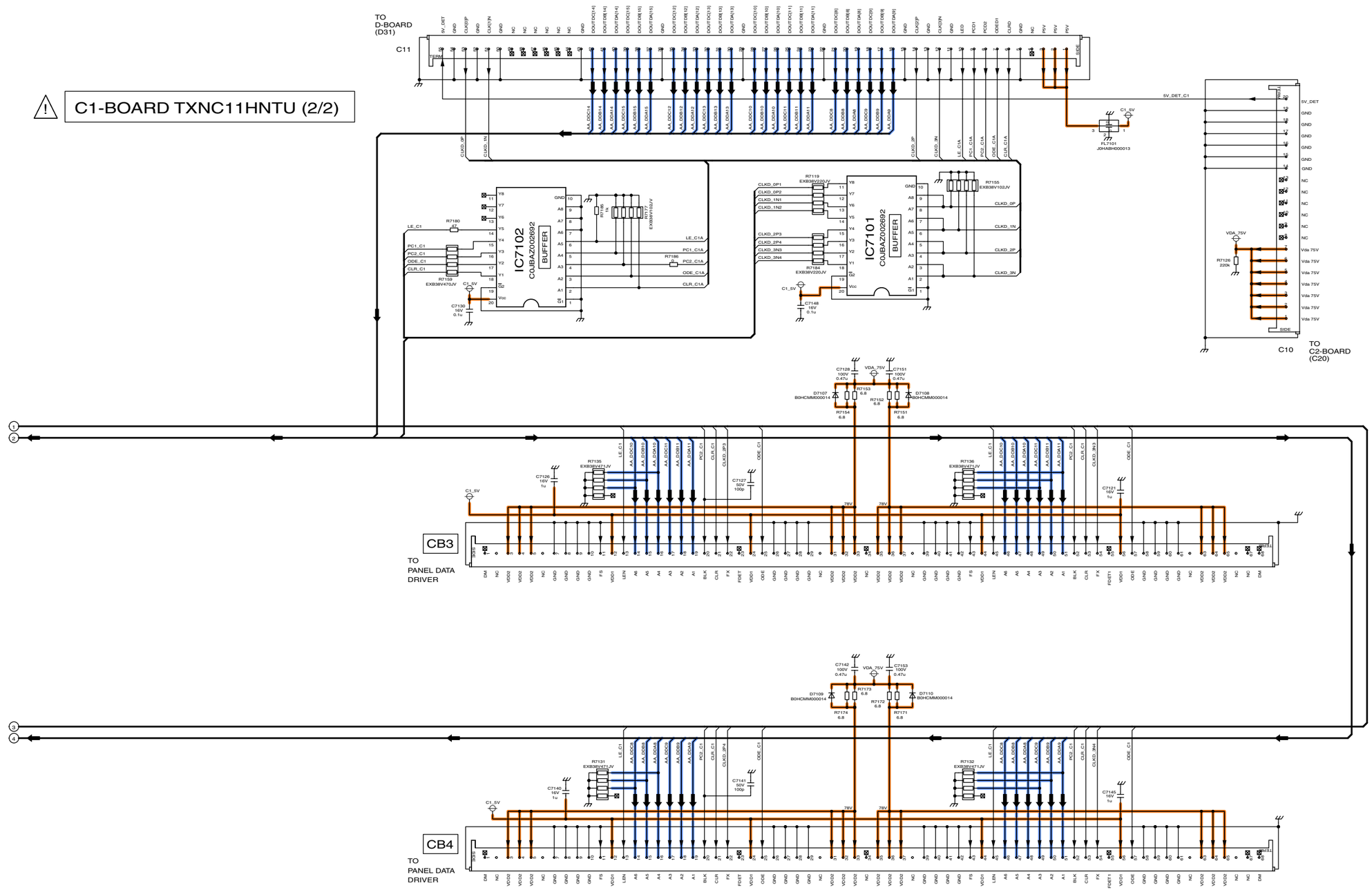

# 15.38. C2-Board (1 of 2) Schematic Diagram

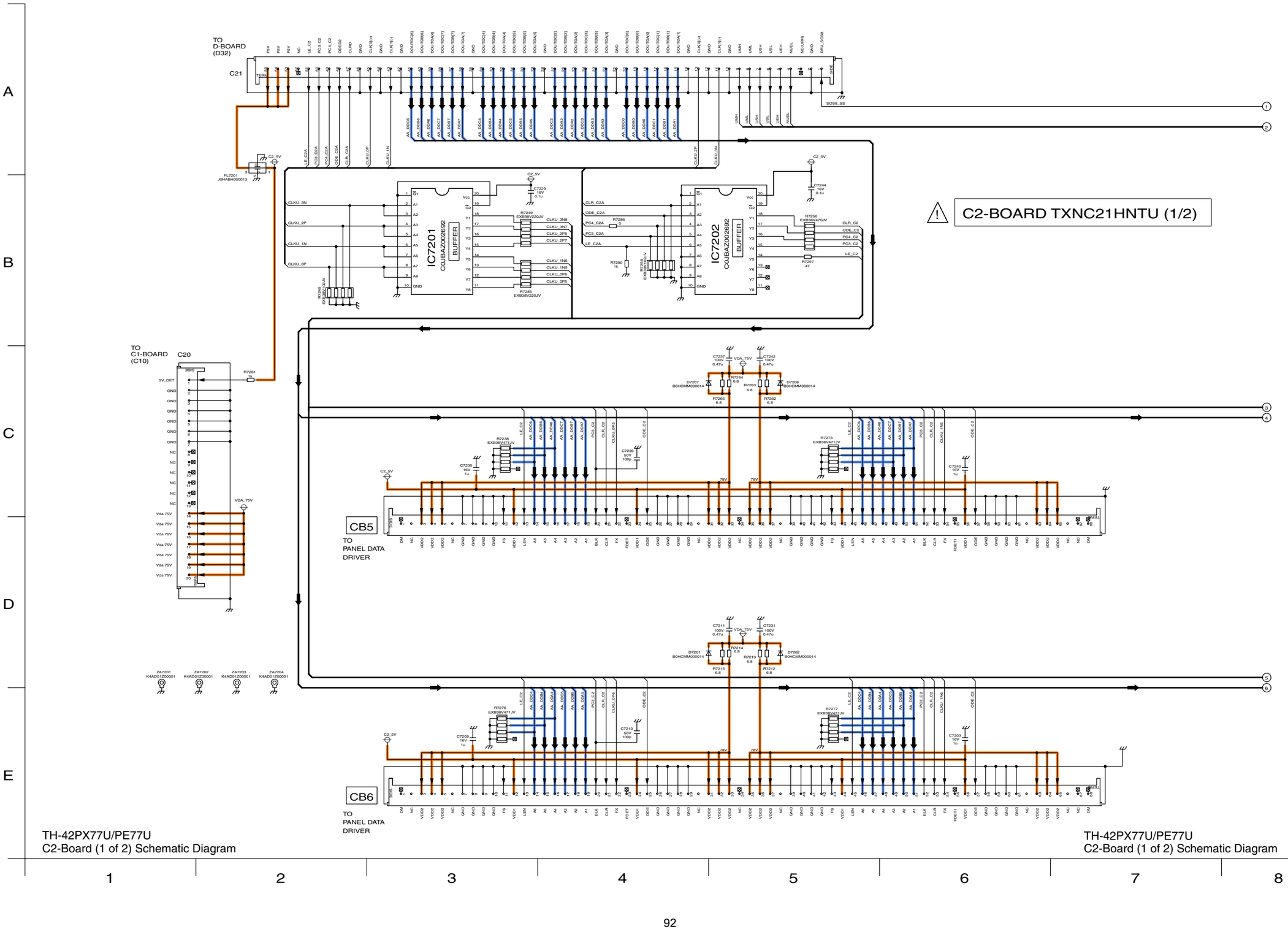

# 15.39. C2-Board (2 of 2) Schematic Diagram

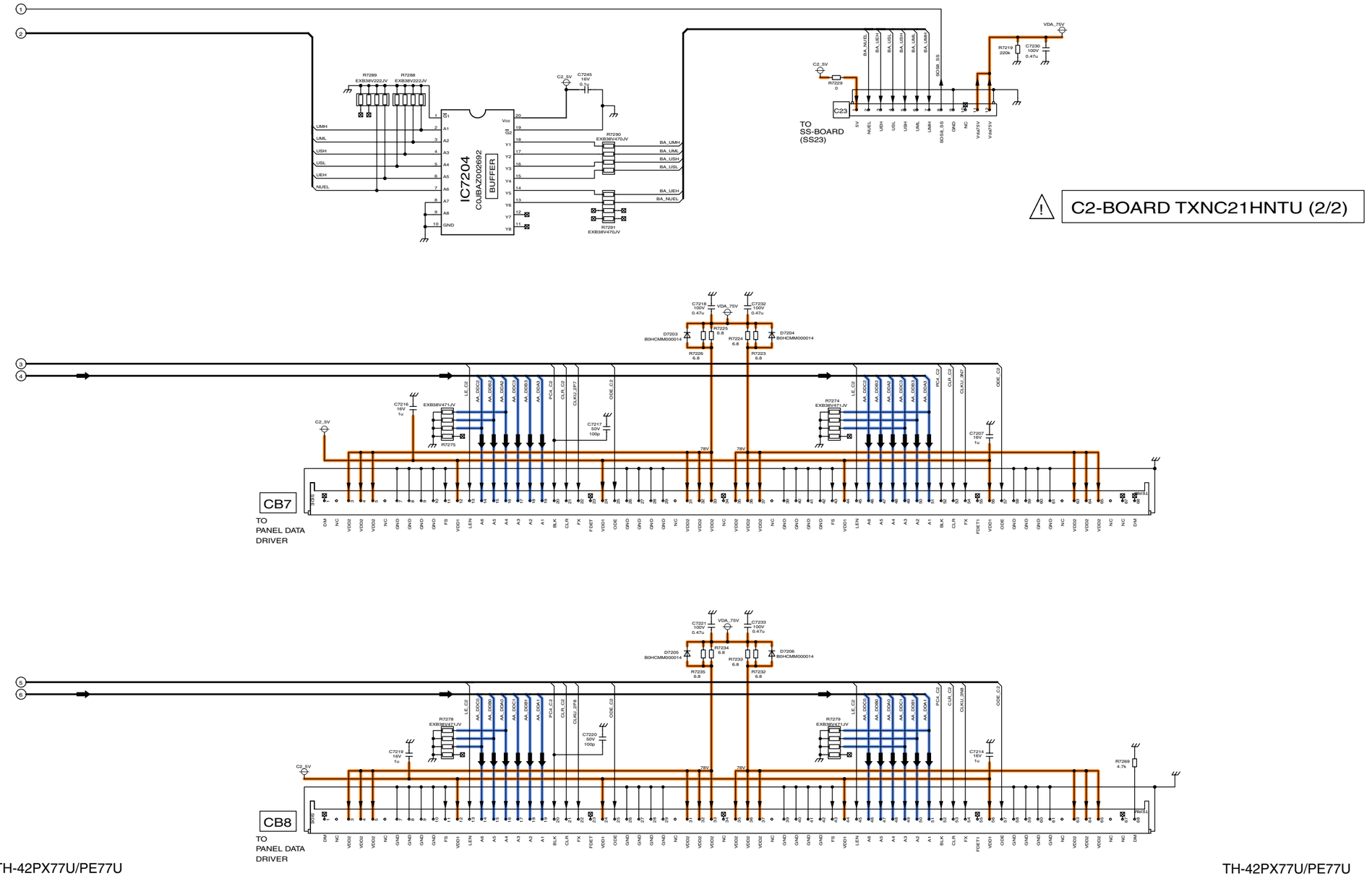


C2-BOARD TXNC21HNTU (2/2)

# 15.40. SC, SU and SD-Board Block Diagram

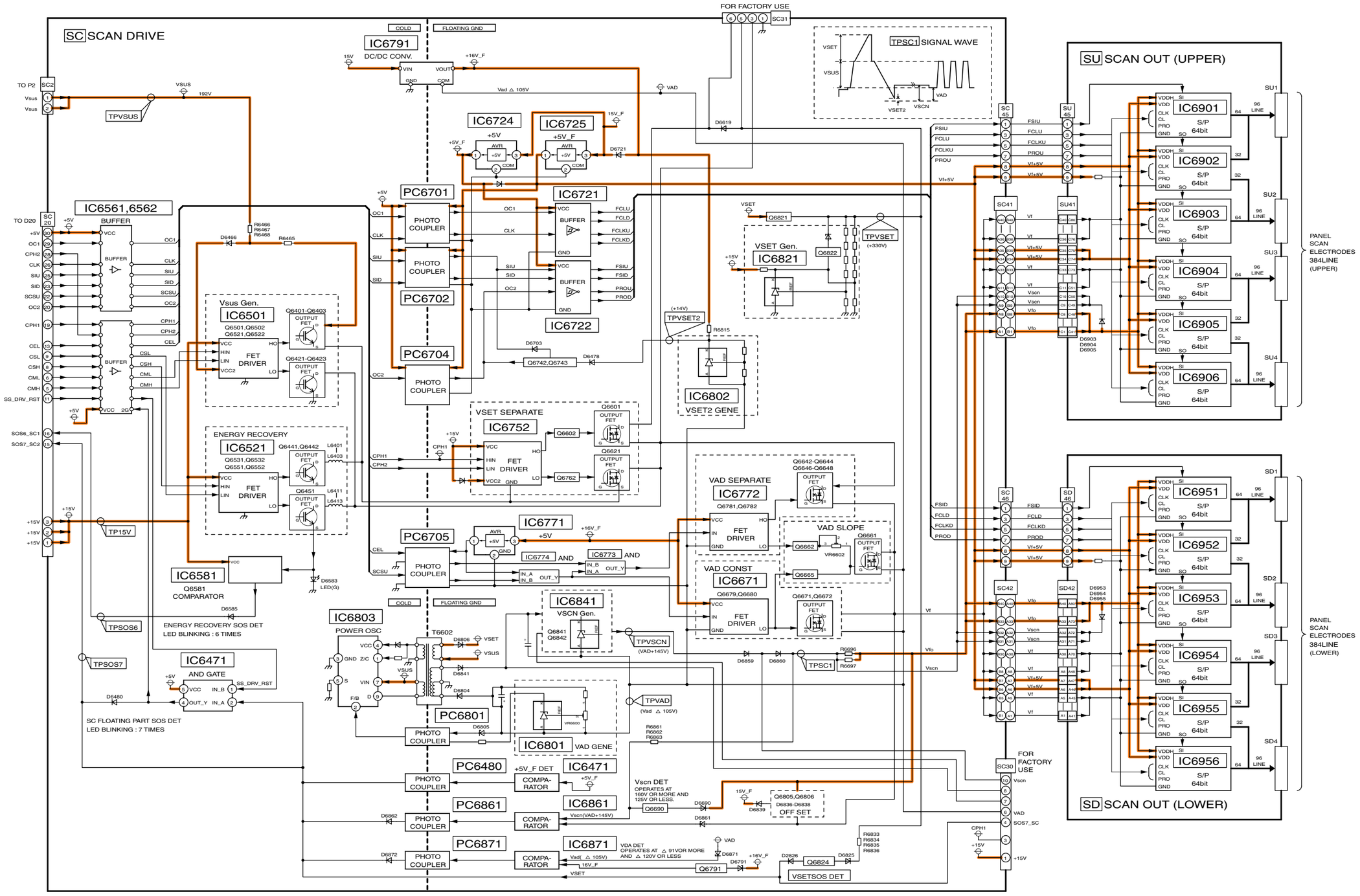


TH-42PX77U/PE77U
SC, SU and SD-Board Block Diagram

TH-42PX77U/PE77U
SC, SU and SD-Board Block Diagram

# 15.41. SC-Board (1 of 2) Schematic Diagram

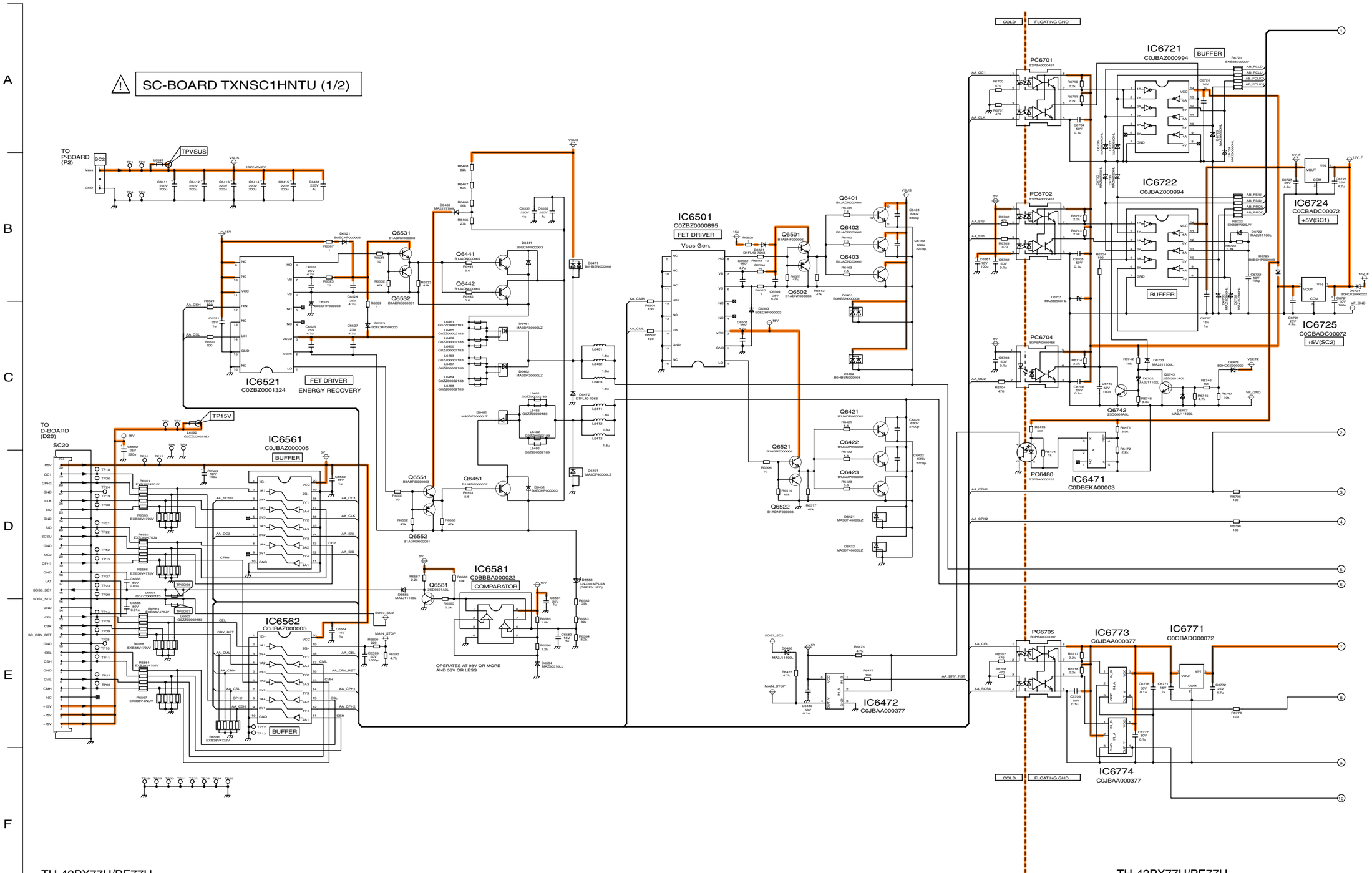


TH-42PX77U/PE77U
SC-Board (1 of 2) Schematic Diagram

TH-42PX77U/PE77U
SC-Board (1 of 2) Schematic Diagram

# 15.42. SC-Board (2 of 2) Schematic Diagram

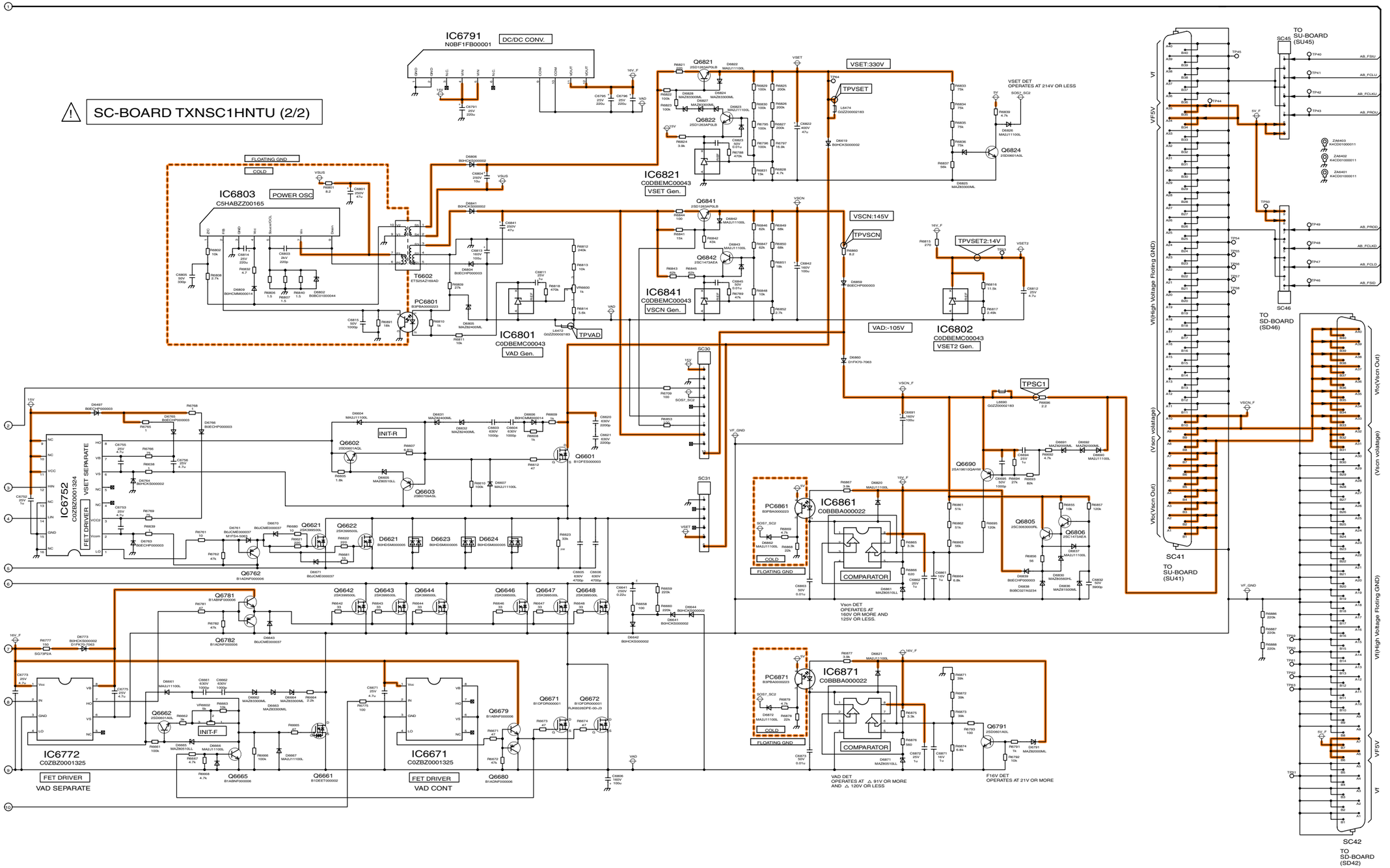


TH-42PX77U/PE77U
SC-Board (2 of 2) Schematic Diagram

TH-42PX77U/PE77U
SC-Board (2 of 2) Schematic Diagram

10 11 12 13 14 15 16 17 18

# 15.43. SU-Board (1 of 2) Schematic Diagram

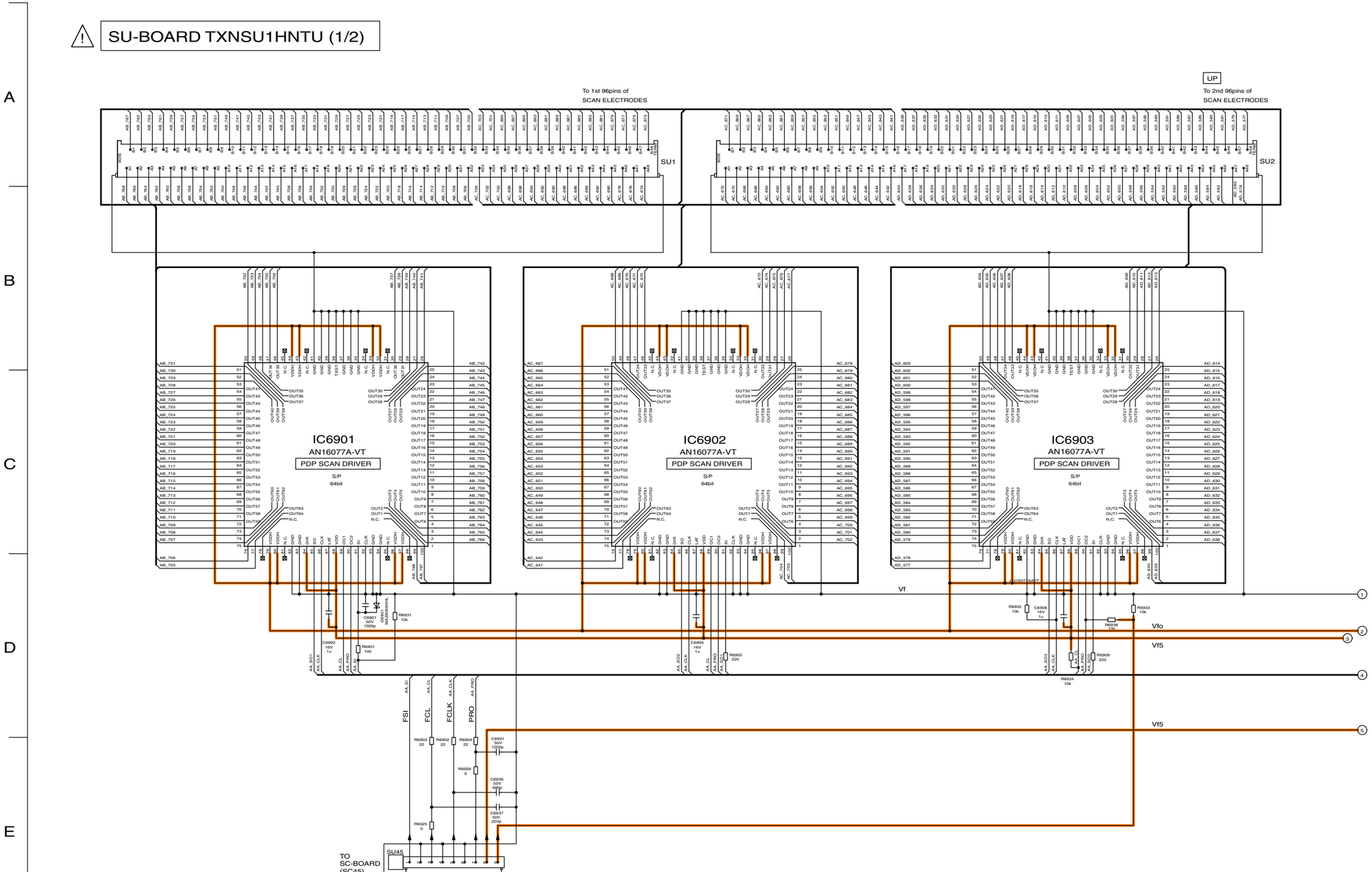


TH-42PX77U/PE77U
SU-Board (1 of 2) Schematic Diagram

TH-42PX77U/PE77U
SU-Board (1 of 2) Schematic Diagram

# 15.44. SU-Board (2 of 2) Schematic Diagram

⚠ SU-BOARD TXNSU1HNTU (2/2)

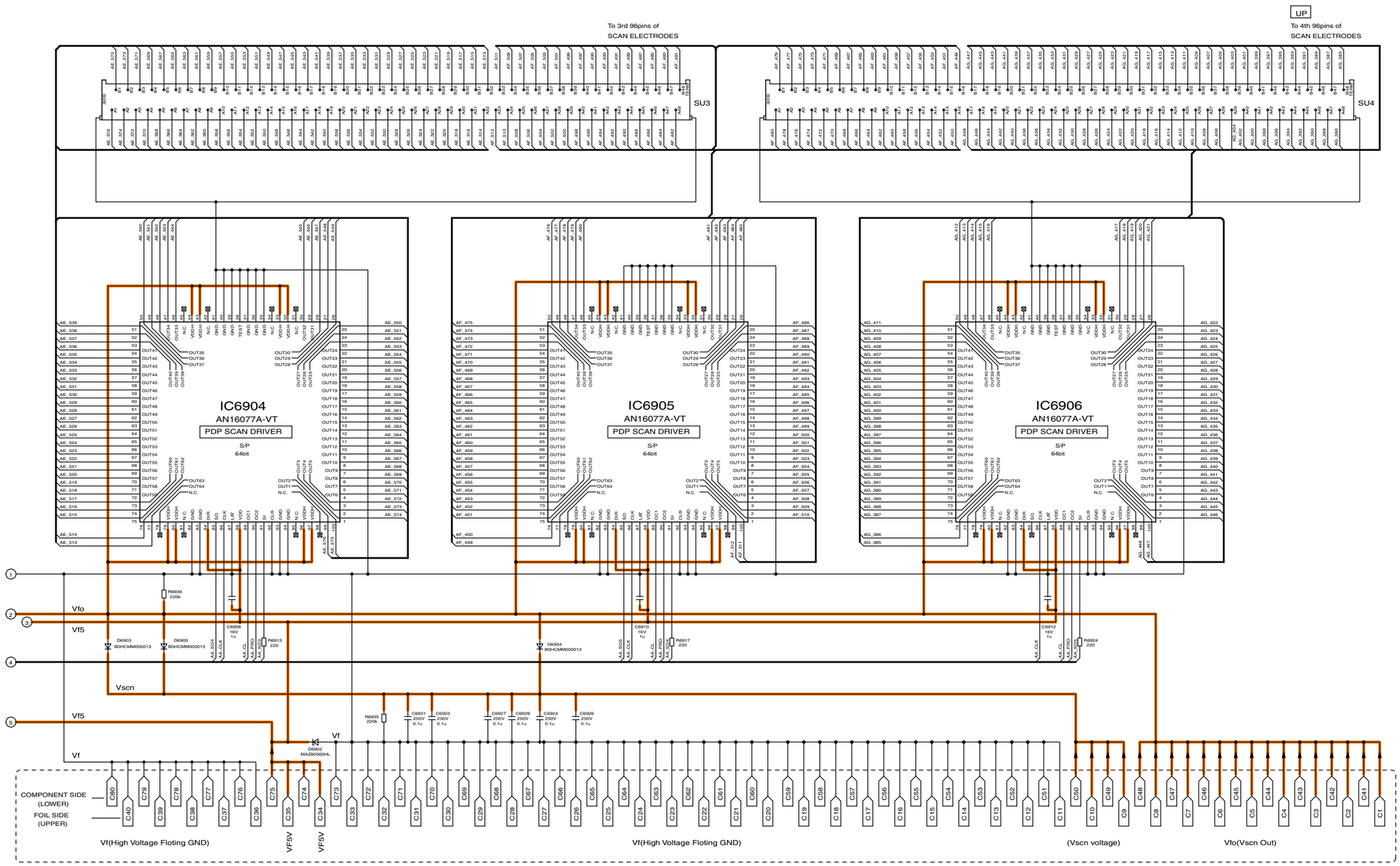

# 15.45. SD-Board (1 of 2) Schematic Diagram

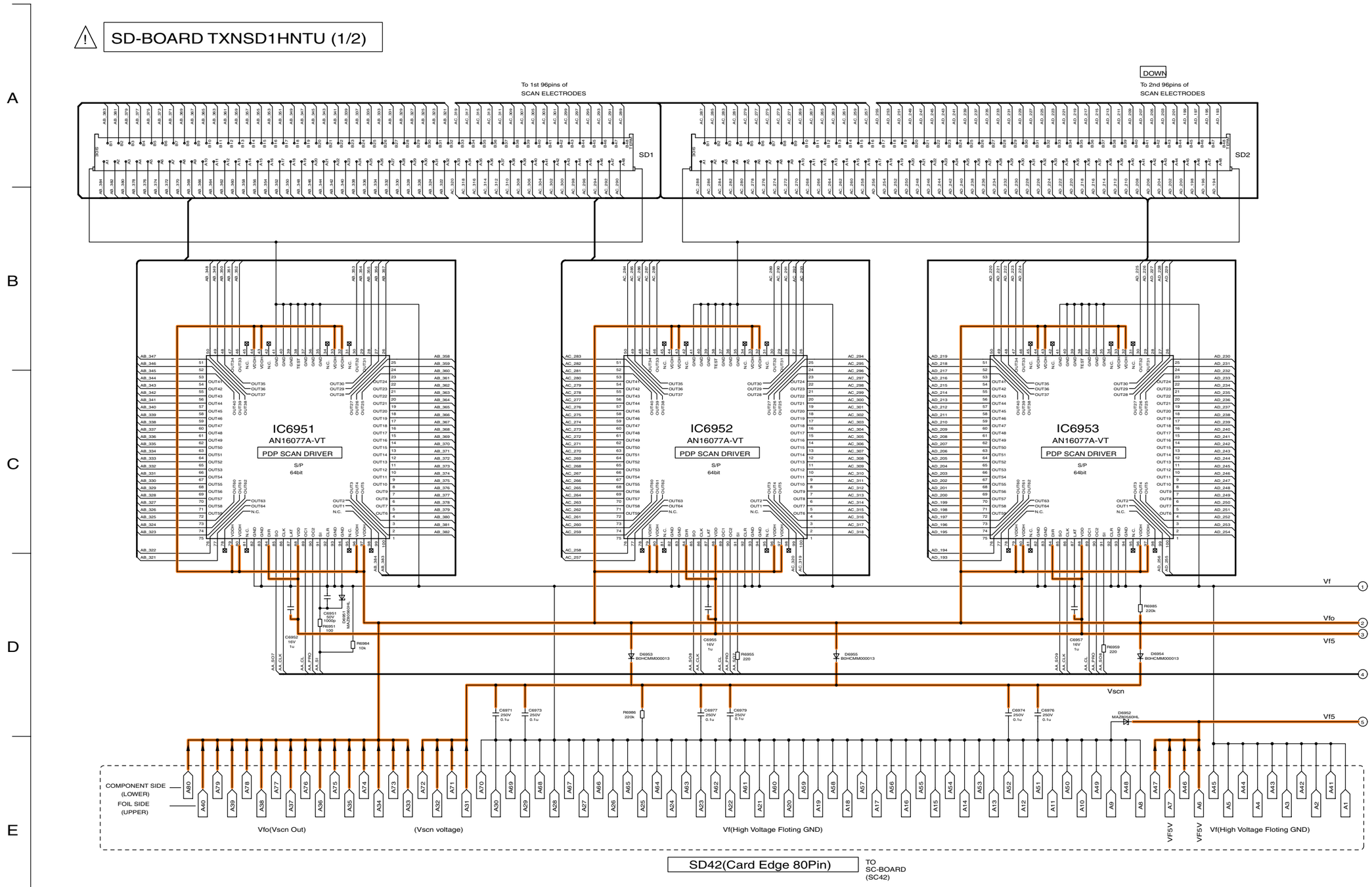


TH-42PX77U/PE77U
SD-Board (1 of 2) Schematic Diagram

TH-42PX77U/PE77U
SD-Board (1 of 2) Schematic Diagram

# 15.46. SD-Board (2 of 2) Schematic Diagram

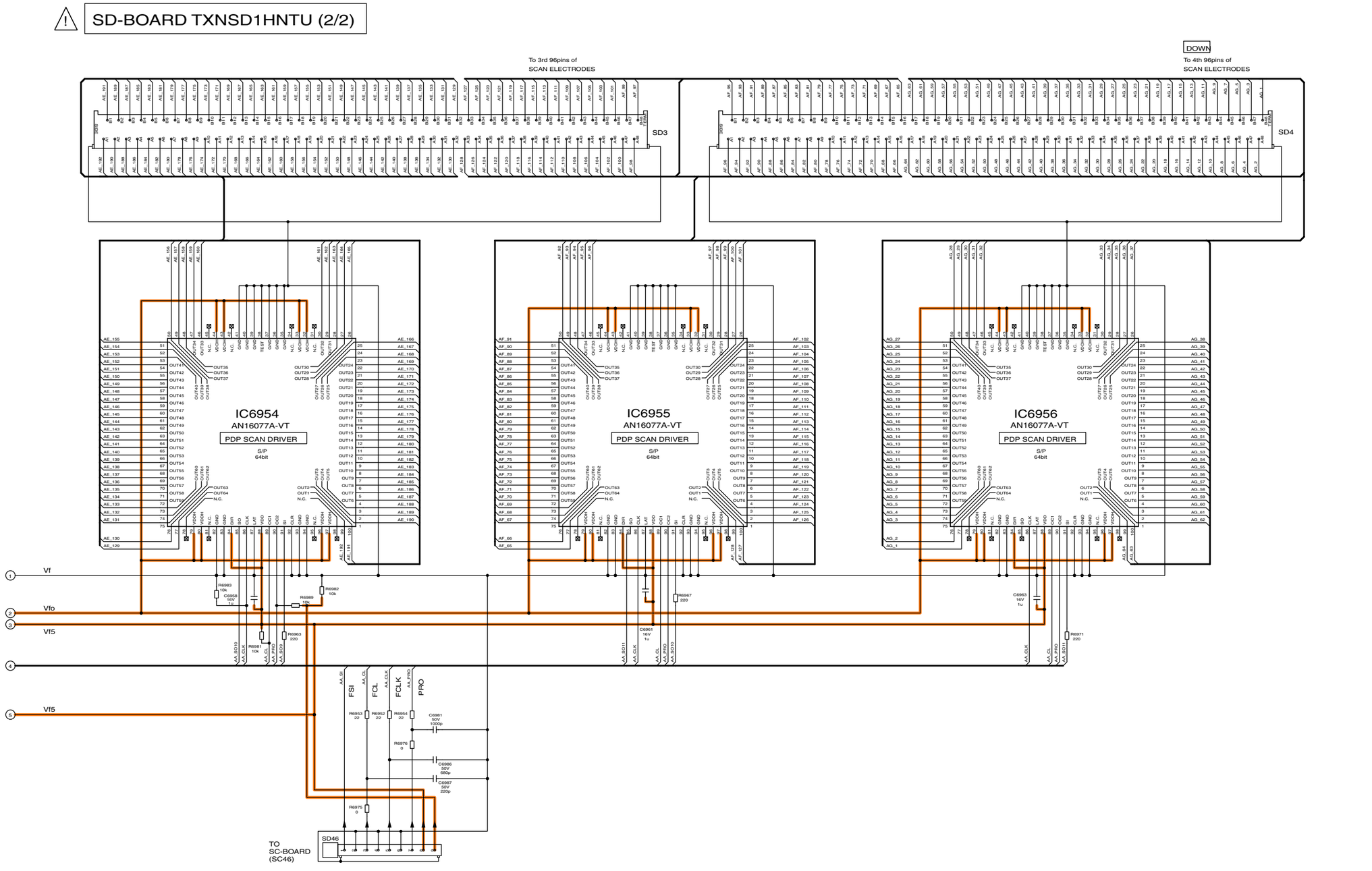


TH-42PX77U/PE77U
SD-Board (2 of 2) Schematic Diagram

TH-42PX77U/PE77U
SD-Board (2 of 2) Schematic Diagram

8 9 10 11 12 13 14 15

# 15.47. SS-Board Block Diagram

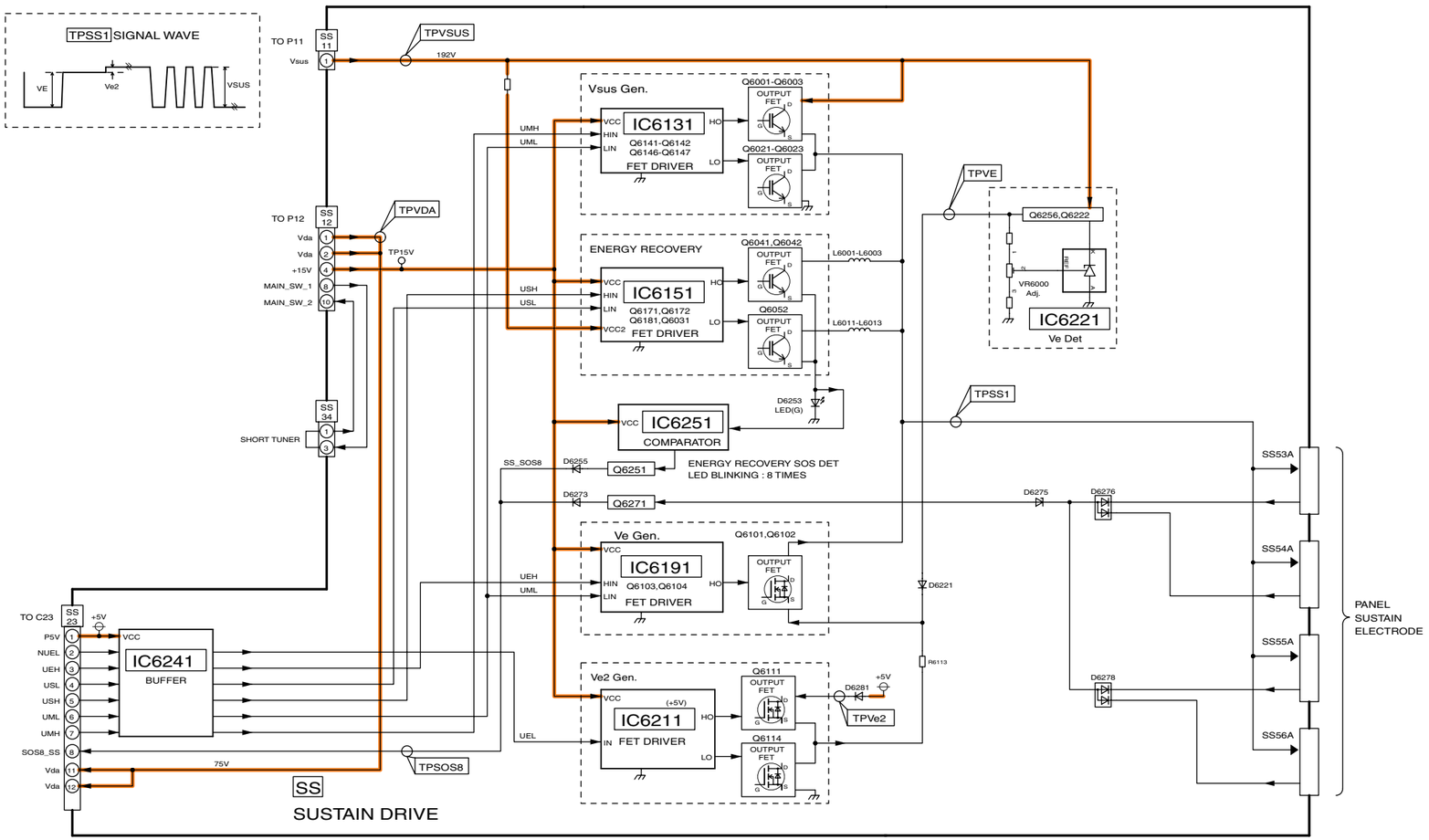




TH-42PX77U/PE77U
SS-Board Block Diagram

# 15.48. SS-Board (1 of 2) Schematic Diagram

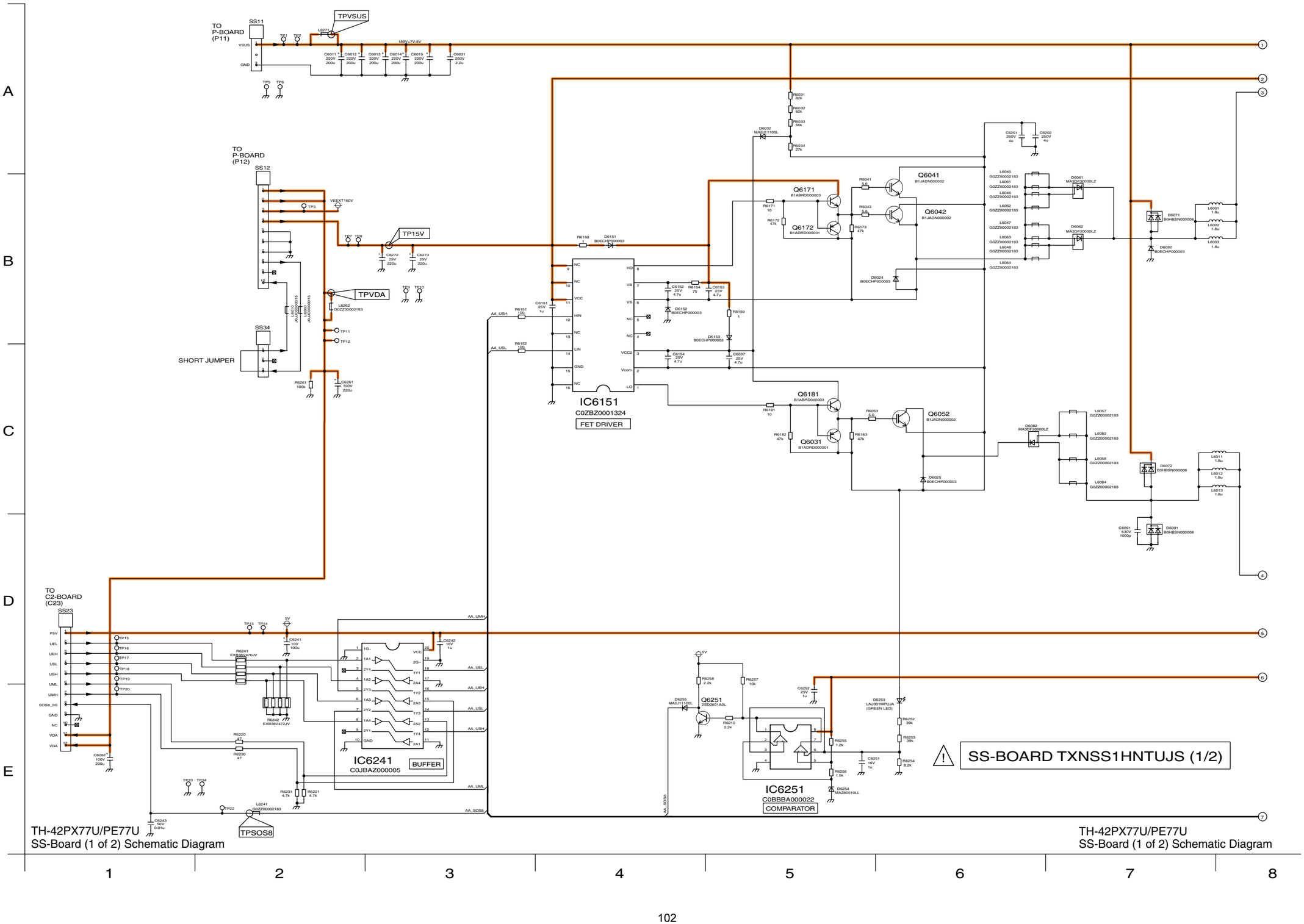

# 15.49. SS-Board (2 of 2) Schematic Diagram

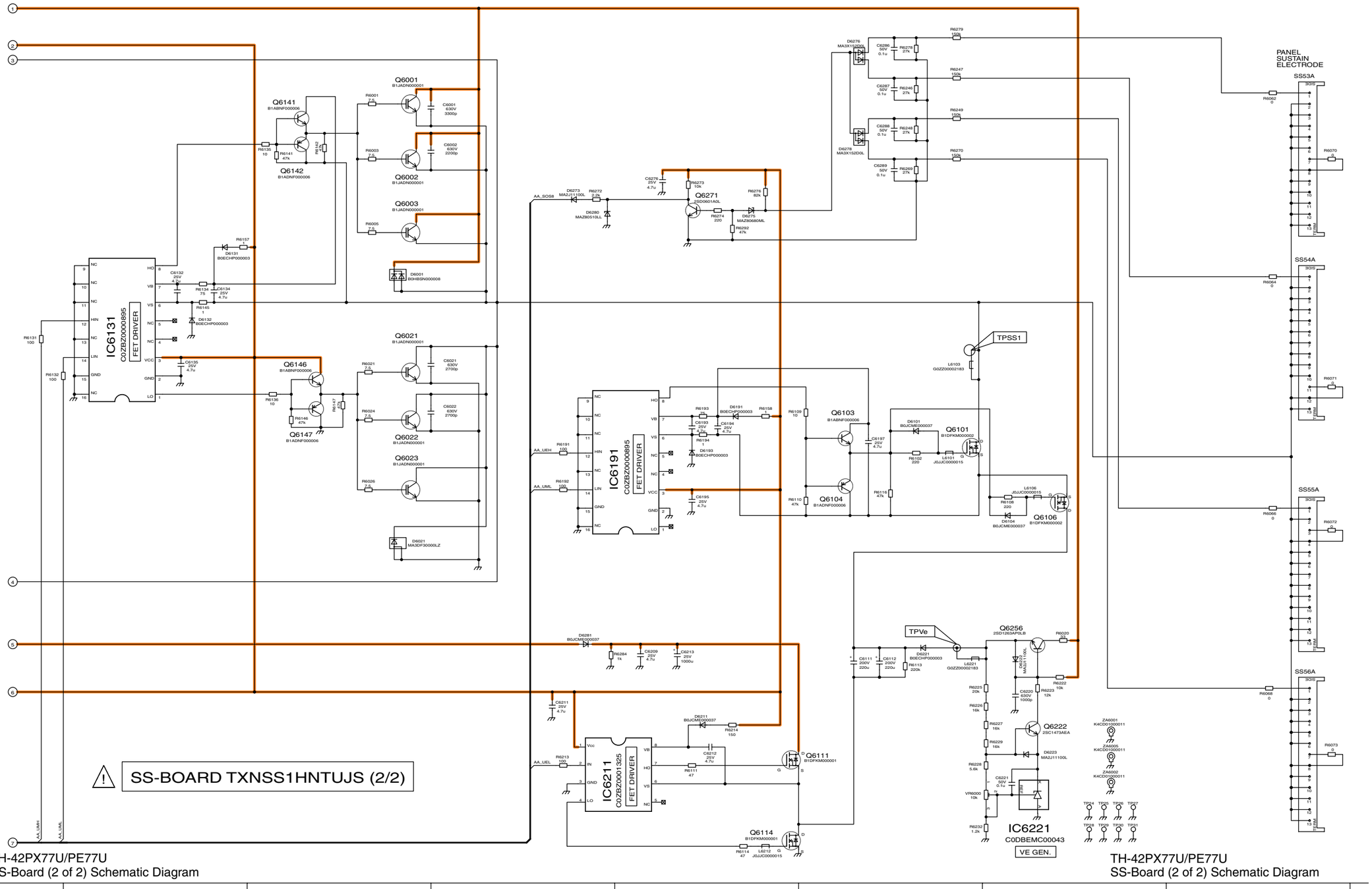

NOTE

# 16 Exploded Views & Replacement Parts List

## 16.1. Exploded Views

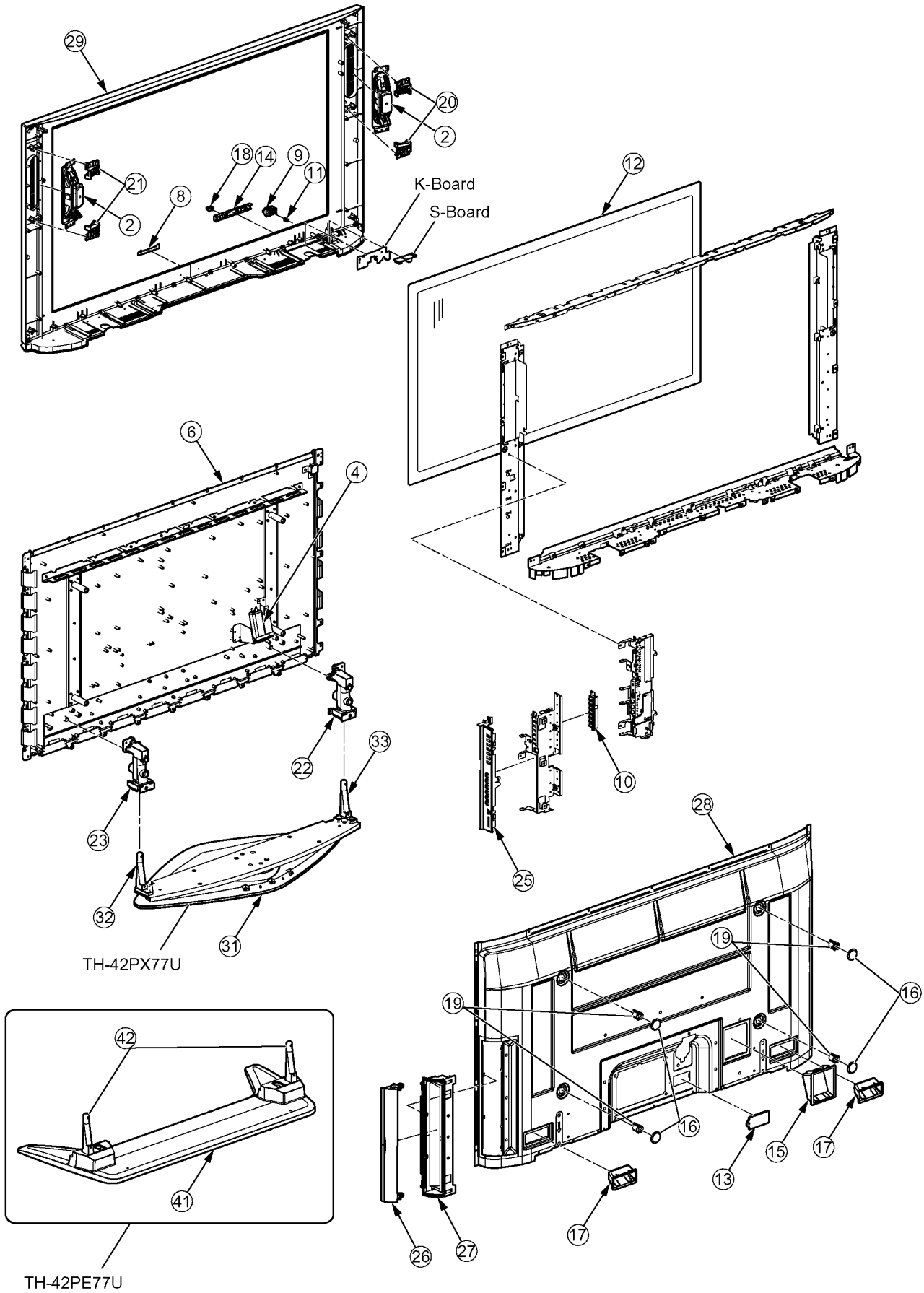

## 16.2. Packing Exploded Views (Accessories box)

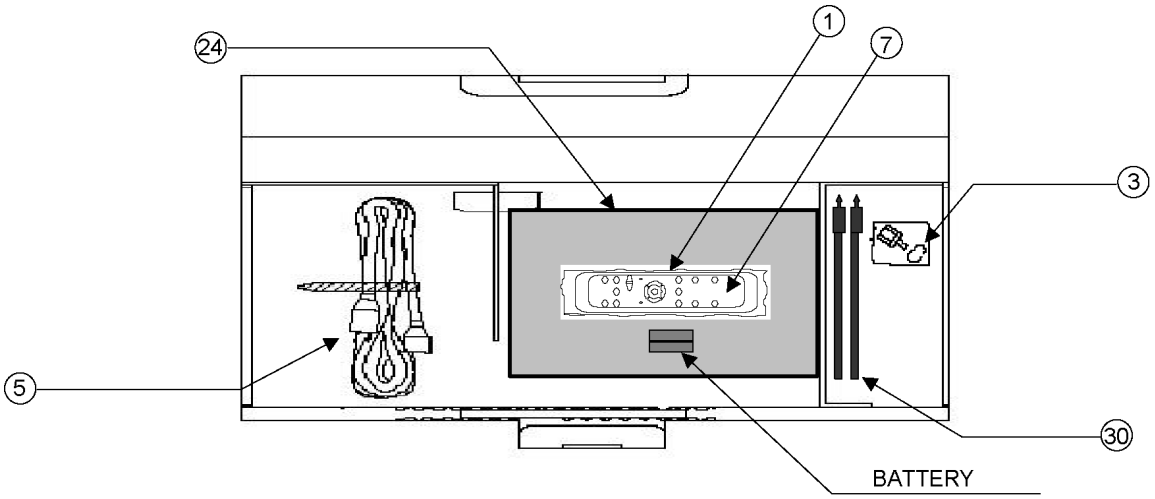

# 16.3. Replacement Parts List Notes

**Important Safety Notice**

*Components identified by ⚠ mark have special characteristics important for safety.*
*When replacing any of these components, use only manufacturer's specified parts.*

**RTL (Retention Time Limited)**

**Note:** The marking (RTL) indicates that the Retention Time is Limited for this item.
After the discontinuation of this assembly in production, the item will continue to be available for a specific period of time. The retention period of availability is dependant on the type of assembly, and in accordance with the laws governing part and product retention.
After the end of this period, the assembly will no longer be available.

Abbreviation of part name and description

1. Resistor

Example:

ERD25TJ104 C 100KOHM, J, 1/4W
Type Allowance

| Type | Allowance |
|---|---|
| C : Carbon | F : ±1% |
| F : Fuse | G : ±2% |
| M : Metal Oxide Metal FIlm | J : ±5% |
| S : Solid | K : ±10% |
| W : Wire Wound | M : ±20% |

2. Capacitor

Example:

ECKF1H103ZF C 0.01UF, Z, 50V
Type Allowance

| Type | Allowance |
|---|---|
| C : Ceramic | C : ±0.25pF |
| E : Electrolytic | D : ±0.5pF |
| P : Polyester Polyprop lene | F : ±1pF |
| | G : ±3pF |
| | J : ±5pF |
| T : Tantalum | K : ±10pF |
| | L : ±15pF |
| | M : ±20pF |
| | P : +100%, -0% |
| | Z : +80%, -20% |

# 16.4. Mechanical Replacement Parts List (PDP TV)

**Note:**

All parts except parts mentioned [PAVCA] in the Remarks column are supplied by PAVC-CSG.

Parts mentioned [PAVCA] are supplied by PAVCA.

| Ref. No. | Part No. | Part Name & Description | Pcs | Remarks |
|---|---|---|---|---|
| 1 | 10030-0035400 | BATTERY COVER | 1 | PAVCA |
| 2 | EAS16S06A | SPEAKER | 2 | |
| 3 | K1RGZBA00001 | F TERMINAL (5C TYPE) | 1 | |
| 4 | K2AHYH000012 | AC INLET | 1 | PAVCA ⚠ |
| 5 | K2CG3DH00025 | AC CORD | 1 | ⚠ |
| 6 | MD42H10A1J | PLASMA DISPLAY PANEL | 1 | ⚠ |
| 7 | N2QAYB000100 | REMOTE CONTROL | 1 | PAVCA |
| 8 | TBMA230 | PANASONIC BADGE | 1 | TH-42PE77U PAVCA |
| 9 | TBX2AA4302 | POWER BUTTON | 1 | PAVCA |
| 10 | TBX2AA4501 | CONTROL BUTTON | 1 | PAVCA |
| 11 | TESD078 | BUTTON SPRING | 1 | |
| | THEL0429 | SCREW | 18 | |
| | THEL047J | SCREW (HDMI:2) | 2 | |
| | THTA0419 | HOOK SCREW | 2 | |
| | THTD011J | SCREW | 2 | |
| | THTF011N | SCREW | 70 | |
| 12 | TKGA5344S | FRONT GLASS | 1 | TH-42PX77U PAVCA |
| 12 | TKGA5324S | FRONT GLASS | 1 | TH-42PE77U PAVCA |
| 13 | TKK2AA7701 | ADJUSTMENT COVER | 1 | PAVCA |
| 14 | TKK2AA8001 | PANEL LIGHT | 1 | PAVCA |
| 15 | TKP2AA1912 | INLET COVER | 1 | PAVCA |
| 16 | TKP2AA1932 | M8 SPACER CAP | 4 | PAVCA |
| 17 | TKR2AA00122 | REAR C0VER HANDLE | 2 | PAVCA |
| 18 | TKR2AA00191 | IR FILTER CAP | 1 | PAVCA |
| | TMM14490 | CLAMPER | 2 | |
| | TMM16452 | CLAMPER | 1 | |
| | TMM16473-1 | CLAMPER | 4 | |
| | TMM25401 | CLAMPER | 1 | |
| 19 | TMM2AE0481 | M8 SPACER | 4 | PAVCA |
| | TMM6428-1 | CLAMPER | 1 | |
| | TMM7468-1 | CLAMPER | 1 | |
| | TMME037 | CLAMPER | 1 | |
| | TMME061 | CLAMPER | 3 | |
| | TMME084 | CLAMPER | 1 | |
| | TMME088 | CLAMPER | 1 | |
| | TMME226 | AC CORD CLAMPER | 1 | |
| | TMME260 | CLAMPER | 16 | |
| | TMME285 | CLAMPER | 1 | |
| 30 | TMME289 | CLAMPER | 2 | |
| | TMME292 | CLAMPER | 1 | |
| 20 | TMZ2AK1001 | SPEAKER HOLDER A | 1 | PAVCA |
| 21 | TMZ2AK1002 | SPEAKER HOLDER B | 1 | PAVCA |
| 22 | TMZ2AX0191 | STAND BRACKET (LEFT) | 1 | PAVCA |
| 23 | TMZ2AX0201 | STAND BRACKET (RIGHT) | 1 | PAVCA |
| | TPD169487 | JOINT | 4 | |
| 24 | TQB2AA0753 | INSTRUCTION BOOK (ENG/FRE/SPA) | 1 | TH-42PX77U PAVCA ⚠ |
| 24 | TQB2AA0756 | INSTRUCTION BOOK (ENG/FRE/SPA) | 1 | TH-42PE77U PAVCA ⚠ |
| | TSXL519 | CABLE (C10-C20) | 1 | |
| | TSXL604 | CABLE (SC20-D20) | 1 | |
| 25 | TXFKP07RSER | SIDE AV BRACKET | 1 | PAVCA |
| 26 | TXFKP08RSER | SIDE AV DOOR ASSY | 1 | PAVCA |
| 27 | TXFKP09RSER | SIDE AV HOLDER ASSY | 1 | PAVCA |
| 28 | TXFKU07RSER | REAR COVER | 1 | PAVCA ⚠ |
| 29 | TXFKY01LHTU | CABINET ASSY | 1 | TH-42PX77U PAVCA ⚠ |
| 29 | TXFKY11RSER | CABINET ASSY | 1 | TH-42PE77U PAVCA ⚠ |
| | TXJA12LHTU | SPEAKER LEAD (H12-SPL/SPR) | 1 | PAVCA |
| | TXJSWRLHTU | SPEAKER CABLE L&R | 1 | PAVCA |
| | XTB4+12GFJ | SCREW | 36 | |
| | XTB4+12GFJK | SCREW | 24 | |
| | XTV3+10JFJK | SCREW | 1 | |
| | XTV3+8GFJK | SCREW | 2 | |
| | XTV3+8GFJK | SCREW (BC-SIDE AV HOLDER) | 5 | |
| | XYN3+F10FJ | SCREW | 1 | |
| | XYN3+F8FJ | SCREW | 31 | |
| | XYN3+J12FJ | SCREW | 26 | |
| | XYN3+J6FJ | SCREW | 1 | |
| | XYN4+E8FJ | SCREW | 1 | |
| | XYN4+F10FJ | SCREW | 15 | |
| | XYN4+F10FJK | SCREW | 13 | |
| | XYN5+C15FJ | SCREW | 8 | |
| | | | | |

# 16.5. Mechanical Replacement Parts List (Stand)

**Note:**

All parts except parts mentioned [PAVCA] in the Remarks column are supplied by PAVC-CSG.

Parts mentioned [PAVCA] are supplied by PAVCA.

| Ref. No. | Part No. | Part Name & Description | Pcs | Remarks |
|---|---|---|---|---|
| 31 | TBL2AX00161 | STAND ASSY | 1 | TH-42PX77U PAVCA |
| 41 | TBL2AX00141 | STAND ASSY | 1 | TH-42PE77U PAVCA |
| 32 | TXFBL010ZDS | STAND POLE A ASSY | 1 | TH-42PX77U PAVCA |
| 33 | TXFBL020ZDS | STAND POLE B ASSY | 1 | TH-42PX77U PAVCA |
| 42 | TXFBL02LJTU | STAND POLE ASSY | 2 | TH-42PE77U PAVCA |
| | TXFBL02LPTU | SCREW ASSY | 1 | TH-42PX77U PAVCA |
| | TXFHM010VKSA | SCREW ASSY | 1 | TH-42PE77U |
| | TXFMM010ZCS | BAND ASSY | 1 | PAVCA |
| | TXFMM01LPTU | TIP-PREVENTION PARTS | 1 | TH-42PX77U PAVCA |
| | TXFMM01LJTU | TIP-PREVENTION PARTS | 1 | TH-42PE77U |
| | | | | |

# 16.6. Electrical Replacement Parts List

**Note:**

All parts except parts mentioned [PAVCA] in the Remarks column are supplied by PAVC-CSG.

Parts mentioned [PAVCA] are supplied by PAVCA.

| Ref. No. | Part No. | Part Name & Description | Pcs | Remarks |
|---|---|---|---|---|
| F401.402 | K5D802BNA005 | TIME LAG FUSE HIGH | 2 | ⚠ |
| | | | | |
| A1 | K1KA07A00271 | 7P CONNECTOR | 1 | |
| A5 | K1KB31AA0140 | 31P CONNECTOR | 1 | |
| A6 | K1KA12AA0191 | 12P CONNECTOR | 1 | |
| A7 | K1KA11AA0191 | 11P CONNECTOR | 1 | |
| A12 | K1KA04AA0192 | 4P CONNECTOR | 1 | |
| A17 | K1KA14A00248 | 14P CONNECTOR | 1 | |
| A18 | K1KA11AA0153 | 11P CONNECTOR | 1 | |
| A51 | K1KA11AA0194 | 11P CONNECTOR | 1 | |
| A52 | K1KA13A00152 | 13P CONNECTOR | 1 | |
| | | | | |
| C10 | K1MN20BA0231 | 20P CONNECTOR | 1 | |
| C11 | K1MN55BA0076 | 55P CONNECTOR | 1 | |
| C20 | K1MN20BA0231 | 20P CONNECTOR | 1 | |
| C21 | K1MN55BA0076 | 55P CONNECTOR | 1 | |
| C23 | K1KA12BA0107 | 12P CONNECTOR | 1 | |
| C1102 | F1J0J1060004 | C 0.010UF, K, 16V | 1 | |
| C1103,04 | F1G1A104A012 | C 0.1UF, K, 10V | 2 | |
| C1105 | F1H0J1050012 | C 1UF, K, 16V | 1 | |
| C1106 | F1H1H2700008 | E 27UF, 50V | 1 | |
| C1107 | F1H1H2200008 | E 22UF, 50V | 1 | |
| C1108 | F1G1A104A012 | C 0.1UF, K, 10V | 1 | |
| C1109 | ECJ1VB1A105K | C 0.01UF, Z, 50V | 1 | |
| C1111 | ECJ1VB1A105K | C 0.01UF, Z, 50V | 1 | |
| C1112 | F1G1A104A012 | C 0.1UF, K, 10V | 1 | |
| C1114 | F1G1A104A012 | C 0.1UF, K, 10V | 1 | |
| C1117 | F1G1A104A012 | C 0.1UF, K, 10V | 1 | |
| C1122 | ECJ0EB1C103K | C 0.010UF, K, 16V | 1 | |
| C1123 | ECJ1VB1A105K | C 0.01UF, Z, 50V | 1 | |
| C1193,94 | F1J0J1060004 | C 0.010UF, K, 16V | 2 | |
| C1197 | F1G1H101A565 | C 100PF, K, 50V | 1 | |
| C2023 | F1G1C104A081 | C 0.10UF, K, 16V | 1 | |
| C2048-50 | F1G1C104A081 | C 0.10UF, K, 16V | 3 | |
| C2052,53 | F1G1C104A081 | C 0.10UF, K, 16V | 2 | |
| C2054 | F1J1A106A043 | C 0.010UF, K, 16V | 1 | |
| C2055,56 | ECJ0EC1H120J | C 120PF, K, 50V | 2 | |
| C2057,58 | F1G1C104A081 | C 0.10UF, K, 16V | 2 | |
| C2059 | F2G0J470A019 | E 47UF 6.3V | 1 | |
| C2100 | F1G1C104A081 | C 0.10UF, K, 16V | 1 | |
| C2101 | F1J1A106A043 | C 0.010UF, K, 16V | 1 | |
| C2102 | F1G1C104A081 | C 0.10UF, K, 16V | 1 | |
| C2103 | EEEHB1C101UP | C 100PF, J, 16V | 1 | |
| C2105,06 | F1G1C104A081 | C 0.10UF, K, 16V | 2 | |
| C2107,08 | F2G0J470A019 | E 47UF 6.3V | 2 | |
| C2111 | F1H0J2250008 | C 2.2UF, K, 16V | 1 | |
| C2116 | F1H1H471A792 | E 470UF, 50V | 1 | |
| C2118 | ECJ1VB1A105K | C 0.01UF, Z, 50V | 1 | |
| C2126 | F1J1A106A043 | C 0.010UF, K, 16V | 1 | |
| C2133 | F2G0J470A019 | E 47UF 6.3V | 1 | |
| C2134 | ECJ0EB1C103K | C 0.010UF, K, 16V | 1 | |
| C2143 | F1H1H181A792 | E 180UF, 50V | 1 | |
| C2146 | F1H1H181A792 | E 180UF, 50V | 1 | |
| C2153 | ECJ1VC1H330J | C 33PF, J, 50V | 1 | |
| C2170 | ECJ1VC1H330J | C 33PF, J, 50V | 1 | |
| C2171 | ECJ0EB1C103K | C 0.010UF, K, 16V | 1 | |
| C2173 | ECJ2FF1C475Z | C 0.047UF, Z, 16V | 1 | |
| C2183 | F1J1A106A043 | C 0.010UF, K, 16V | 1 | |
| C2185 | F1J1A106A043 | C 0.010UF, K, 16V | 1 | |
| C2186 | F1G1C104A081 | C 0.10UF, K, 16V | 1 | |
| C2187 | F1H0J2250008 | C 2.2UF, K, 16V | 1 | |
| C2188 | F1H1H471A792 | E 470UF, 50V | 1 | |
| C2189 | ECJ1VB1A105K | C 0.01UF, Z, 50V | 1 | |
| C2190,91 | F1J1A106A043 | C 0.010UF, K, 16V | 2 | |
| C2192 | F2G0J470A019 | E 47UF 6.3V | 1 | |
| C2213 | ECJ1VB1H102K | C 1000UF, Z, 50V | 1 | |
| C2216 | F1G1C104A081 | C 0.10UF, K, 16V | 1 | |
| C2244 | F1G1C104A081 | C 0.10UF, K, 16V | 1 | |
| C2245 | ECJ1VB1H102K | C 1000UF, Z, 50V | 1 | |
| C2246 | F1J1A106A043 | C 0.010UF, K, 16V | 1 | |
| C2251 | F1J1A106A043 | C 0.010UF, K, 16V | 1 | |
| C2263,64 | ECJ2FB1A475K | C 4.7UF, K, 10V | 2 | |
| C2267,68 | ECJ1XC1H101J | C 100PF, J, 50V | 2 | |
| C2274 | F1G1C104A081 | C 0.10UF, K, 16V | 1 | |
| C2301,02 | F1G1C104A081 | C 0.10UF, K, 16V | 2 | |
| C2303 | F1J1E105A171 | E 1 UF 25V | 1 | |
| C2305 | F1J1E105A171 | E 1 UF 25V | 1 | |
| C2307 | F1J1E105A171 | E 1 UF 25V | 1 | |
| C2309 | F1J1E105A171 | E 1 UF 25V | 1 | |
| C2313 | ECJ1XB1H104K | C 10PF, J, 50V | 1 | |
| C2317 | ECJ1VB1C333K | C 0.033UF, K, 16V | 1 | |
| C2319 | ECJ1VB1C333K | C 0.033UF, K, 16V | 1 | |
| C2321 | ECJ1VB1C333K | C 0.033UF, K, 16V | 1 | |
| C2323 | ECJ1VB1C333K | C 0.033UF, K, 16V | 1 | |
| C2325 | F1J1H474A757 | C 0.47UF, 50V | 1 | |
| C2331 | F1J1H474A757 | C 0.47UF, 50V | 1 | |
| C2333 | ECJ1XB1H104K | C 10PF, J, 50V | 1 | |
| C2335 | ECJ1XB1H104K | C 10PF, J, 50V | 1 | |
| C2337 | F1H1H223A219 | E 0.022UF, 50V | 1 | |
| C2339 | F1H1H223A219 | E 0.022UF, 50V | 1 | |
| C2341 | ECJ1XB1H104K | C 10PF, J, 50V | 1 | |
| C2343 | ECJ1XB1H104K | C 10PF, J, 50V | 1 | |
| C2345 | F1H1H223A219 | E 0.022UF, 50V | 1 | |
| C2347 | F1H1H223A219 | E 0.022UF, 50V | 1 | |
| C2349 | F1G1C104A081 | C 0.10UF, K, 16V | 1 | |
| C2352 | ECJ1VB1C105K | C 0.01UF, K, 16V | 1 | |
| C2353 | ECJ1XB1H104K | C 10PF, J, 50V | 1 | |
| C2355 | ECJ1XB1H104K | C 10PF, J, 50V | 1 | |
| C2357 | ECJ1XB1H104K | C 10PF, J, 50V | 1 | |
| C2359 | ECJ1XB1H104K | C 10PF, J, 50V | 1 | |
| C2361 | EEEFG1E471P | E 470UF, 25V | 1 | |
| C2363 | EEEHB1C221UP | C 220PF, J, 16V | 1 | |
| C2365 | F1G1C104A081 | C 0.10UF, K, 16V | 1 | |
| C2367 | F1G1C104A081 | C 0.10UF, K, 16V | 1 | |
| C2369 | F1G1C104A081 | C 0.10UF, K, 16V | 1 | |
| C2371 | F1G1C104A081 | C 0.10UF, K, 16V | 1 | |
| C2373 | F1G1C104A081 | C 0.10UF, K, 16V | 1 | |
| C2375 | F1H1H223A219 | E 0.022UF, 50V | 1 | |
| C2377 | F1H1H223A219 | E 0.022UF, 50V | 1 | |
| C2379 | F1H1H223A219 | E 0.022UF, 50V | 1 | |
| C2381 | F1H1H223A219 | E 0.022UF, 50V | 1 | |
| C2383 | ECJ1VB1H102K | C 1000UF, Z, 50V | 1 | |
| C2385 | ECJ1VB1H102K | C 1000UF, Z, 50V | 1 | |
| C2387 | ECJ1VB1H102K | C 1000UF, Z, 50V | 1 | |
| C2389 | ECJ1VB1H102K | C 1000UF, Z, 50V | 1 | |
| C2512 | ECJ3XB0J106M | C 10UF, M,6.3V | 1 | |
| C2515 | ECJ1VB1H103K | C 0.001UF, K, 50V | 1 | |
| C2521 | ECJ1VB1H103K | C 0.001UF, K, 50V | 1 | |
| C3001 | ECJ1VB1A105K | C 0.01UF, Z, 50V | 1 | |

| Ref. No. | Part No. | Part Name & Description | Pcs | Remarks |
|---|---|---|---|---|
| C3003 | ECJ1VB1A105K | C 0.01UF, Z, 50V | 1 | |
| C3005 | ECJ0EB1C103K | C 0.010UF, K, 16V | 1 | |
| C3006 | F1G1C104A081 | C 0.10UF, K, 16V | 1 | |
| C3007 | F2G1A101A019 | E 100UF, 10V | 1 | |
| C3014 | ECJ1VB1A105K | C 0.01UF, Z, 50V | 1 | |
| C3016 | ECJ1VB1A105K | C 0.01UF, Z, 50V | 1 | |
| C3018 | ECJ0EB1C103K | C 0.010UF, K, 16V | 1 | |
| C3020 | ECJ1VB1A105K | C 0.01UF, Z, 50V | 1 | |
| C3025 | F1G1C104A081 | C 0.10UF, K, 16V | 1 | |
| C3032 | EEEHB1C220R | C 22PF, J, 16V | 1 | |
| C3033 | EEEHB1A221P | C 220PF, J, 10V | 1 | |
| C3045 | F1G1C104A081 | C 0.10UF, K, 16V | 1 | |
| C3069 | F1G1C104A081 | C 0.10UF, K, 16V | 1 | |
| C3071 | ECJ1VB1A105K | C 0.01UF, Z, 50V | 1 | |
| C3073 | ECJ1VB1A105K | C 0.01UF, Z, 50V | 1 | |
| C3075 | ECJ1VB1A105K | C 0.01UF, Z, 50V | 1 | |
| C3077 | ECJ1VB1A105K | C 0.01UF, Z, 50V | 1 | |
| C3079 | ECJ1VB1A105K | C 0.01UF, Z, 50V | 1 | |
| C3081 | ECJ1VB1A105K | C 0.01UF, Z, 50V | 1 | |
| C3086 | EEEHB1C100R | C 10PF, J, 16V | 1 | |
| C3087 | ECJ1VB1A105K | C 0.01UF, Z, 50V | 1 | |
| C3095 | ECJ1VB1A105K | C 0.01UF, Z, 50V | 1 | |
| C3097 | ECJ1VB1A105K | C 0.01UF, Z, 50V | 1 | |
| C3099 | ECJ0EB1C103K | C 0.010UF, K, 16V | 1 | |
| C3103,04 | ECJ1VB1A105K | C 0.01UF, Z, 50V | 2 | |
| C3105 | F1G1C104A081 | C 0.10UF, K, 16V | 1 | |
| C3106-17 | ECJ1VB1A105K | C 0.01UF, Z, 50V | 12 | |
| C3120,21 | ECJ1VB1A105K | C 0.01UF, Z, 50V | 2 | |
| C3123,24 | F1K1A106A021 | C 0.010UF, K,6.3V | 2 | PAVCA |
| C3132,33 | F1H0J2250008 | C 2.2UF, K, 16V | 2 | |
| C3138 | EEEHB1C220R | C 22PF, J, 16V | 1 | |
| C3145 | F2G1A101A019 | E 100UF, 10V | 1 | |
| C3146 | F1G1C104A081 | C 0.10UF, K, 16V | 1 | |
| C3153 | ECJ1VB1A105K | C 0.01UF, Z, 50V | 1 | |
| C3157 | F1G1C104A081 | C 0.10UF, K, 16V | 1 | |
| C3502 | F2A1C471A537 | E 470UF, 16V | 1 | |
| C3503 | F1G1C104A081 | C 0.10UF, K, 16V | 1 | |
| C3504 | F2A1C471A537 | E 470UF, 16V | 1 | |
| C3505 | F1G1C104A081 | C 0.10UF, K, 16V | 1 | |
| C3513,14 | F1G1C104A081 | C 0.10UF, K, 16V | 2 | |
| C3515 | F2A1H331A257 | E 330UF, 50V | 1 | |
| C3516 | ECJ1VB1E104K | C 0.10UF, K, 25V | 1 | |
| C3530 | EEEFG1E471P | E 470UF, 25V | 1 | |
| C3750 | F1J1H102A721 | E 1000UF, 50V | 1 | |
| C4075 | F1G1C104A081 | C 0.10UF, K, 16V | 1 | |
| C4077,78 | ECJ1VB1C105K | C 0.01UF, K, 16V | 2 | |
| C4500-03 | F1G1C104A081 | C 0.10UF, K, 16V | 4 | |
| C4506,07 | F1G1C104A081 | C 0.10UF, K, 16V | 2 | |
| C4508,09 | EEEHB0J330R | C 33PF, J, 6.3V | 2 | |
| C4510,11 | F1G1C104A081 | C 0.10UF, K, 16V | 2 | |
| C4515 | F1G1C104A081 | C 0.10UF, K, 16V | 1 | |
| C4527 | ECJ1VB1A105K | C 0.01UF, Z, 50V | 1 | |
| C4528 | F1G1C104A081 | C 0.10UF, K, 16V | 1 | |
| C4531 | F1G1C104A081 | C 0.10UF, K, 16V | 1 | |
| C4533 | F1G1H680A565 | E 68UF, 50V | 1 | |
| C4534,35 | F1G1C104A081 | C 0.10UF, K, 16V | 2 | |
| C4538 | F2G0J470A019 | E 47UF 6.3V | 1 | |
| C4539 | F1J1A106A043 | C 0.010UF, K, 16V | 1 | |
| C4541 | F1H1H471A219 | E 470UF, 50V | 1 | |
| C4543-45 | F1G1C104A081 | C 0.10UF, K, 16V | 3 | |
| C4546 | F1H0J2250008 | C 2.2UF, K, 16V | 1 | |
| C4547 | F1G1C104A081 | C 0.10UF, K, 16V | 1 | |
| C4548,49 | ECJ1XB1H104K | C 10PF, J, 50V | 2 | |
| C4550,51 | F1G1C104A081 | C 0.10UF, K, 16V | 2 | |
| C4552 | ECJ1XB1H104K | C 10PF, J, 50V | 1 | |
| C4553 | F1G1H1020008 | E 1000UF, 50V | 1 | |
| C4555,56 | F1J1A106A043 | C 0.010UF, K, 16V | 2 | |
| C4557 | F1G1C104A081 | C 0.10UF, K, 16V | 1 | |

| Ref. No. | Part No. | Part Name & Description | Pcs | Remarks |
|---|---|---|---|---|
| C4559,60 | F1G1C104A081 | C 0.10UF, K, 16V | 2 | |
| C4562 | F1H1H822A219 | E 8200UF, 50V | 1 | |
| C4563 | ECJ1VB1C823K | C 0.082UF, K, 16V | 1 | |
| C4564,65 | F1G1E1030005 | C 0.01UF, Z, 25V | 2 | |
| C4566 | ECJ1XB1C393K | C 0.039UF, K, 16V | 1 | |
| C4568 | F1G1C104A081 | C 0.10UF, K, 16V | 1 | |
| C4569 | F1J1C684A097 | C 0.68UF, Z, 16V | 1 | |
| C4570 | F2G0J470A019 | E 47UF 6.3V | 1 | |
| C4572,73 | F1G1C104A081 | C 0.10UF, K, 16V | 2 | |
| C4574 | F1G1E1030005 | C 0.01UF, Z, 25V | 1 | |
| C4575 | ECJ1VB1A105K | C 0.01UF, Z, 50V | 1 | |
| C4576 | EEEHB1C220R | C 22PF, J, 16V | 1 | |
| C4577,78 | F1G1C104A081 | C 0.10UF, K, 16V | 2 | |
| C4580 | F1G1E1030005 | C 0.01UF, Z, 25V | 1 | |
| C4581 | ECJ1VB1A105K | C 0.01UF, Z, 50V | 1 | |
| C4582,83 | F1G1C104A081 | C 0.10UF, K, 16V | 2 | |
| C4584,85 | ECJ1VB1A105K | C 0.01UF, Z, 50V | 2 | |
| C4586 | F1G1E1030005 | C 0.01UF, Z, 25V | 1 | |
| C4587 | F1G1C104A081 | C 0.10UF, K, 16V | 1 | |
| C4588 | ECJ1VB1C823K | C 0.082UF, K, 16V | 1 | |
| C4589 | F1G1H150A565 | E 15UF, 50V | 1 | |
| C4590 | F1G1H180A565 | E 18UF, 50V | 1 | |
| C4593 | F1G1E1030005 | C 0.01UF, Z, 25V | 1 | |
| C4595 | F1G1E1030005 | C 0.01UF, Z, 25V | 1 | |
| C4596 | F1G1C104A081 | C 0.10UF, K, 16V | 1 | |
| C4598 | ECJ1VB1A105K | C 0.01UF, Z, 50V | 1 | |
| C4600,01 | F1G1E1030005 | C 0.01UF, Z, 25V | 2 | |
| C4602 | F1G1C104A081 | C 0.10UF, K, 16V | 1 | |
| C4604 | F1H0J2250008 | C 2.2UF, K, 16V | 1 | |
| C4605 | F1G1C104A081 | C 0.10UF, K, 16V | 1 | |
| C4607 | F2G0J470A019 | E 47UF 6.3V | 1 | |
| C4609 | ECJ1VB1A105K | C 0.01UF, Z, 50V | 1 | |
| C4611 | ECJ1VB1A105K | C 0.01UF, Z, 50V | 1 | |
| C4612 | F1G1E1030005 | C 0.01UF, Z, 25V | 1 | |
| C4613 | ECJ1VB1A105K | C 0.01UF, Z, 50V | 1 | |
| C4614 | F1G1C104A081 | C 0.10UF, K, 16V | 1 | |
| C4615 | F1G1E1030005 | C 0.01UF, Z, 25V | 1 | |
| C4616,17 | F1G1C104A081 | C 0.10UF, K, 16V | 2 | |
| C4618 | F1G1E1030005 | C 0.01UF, Z, 25V | 1 | |
| C4619 | F1G1C104A081 | C 0.10UF, K, 16V | 1 | |
| C4620 | ECJ1VB1A105K | C 0.01UF, Z, 50V | 1 | |
| C4623-25 | F1G1C104A081 | C 0.10UF, K, 16V | 3 | |
| C4630 | F1G1C104A081 | C 0.10UF, K, 16V | 1 | |
| C4701 | F1G1H1020008 | E 1000UF, 50V | 1 | |
| C4702 | F1G1A104A012 | C 0.1UF, K, 10V | 1 | |
| C4703 | F1G1H1020008 | E 1000UF, 50V | 1 | |
| C4704,05 | F1G1A104A012 | C 0.1UF, K, 10V | 2 | |
| C4711,12 | F1G1A104A012 | C 0.1UF, K, 10V | 2 | |
| C4713,14 | F1G1H1020008 | E 1000UF, 50V | 2 | |
| C4715 | F1G1A104A012 | C 0.1UF, K, 10V | 1 | |
| C4716-19 | F1G1H1020008 | E 1000UF, 50V | 4 | |
| C4721 | F1G1A104A012 | C 0.1UF, K, 10V | 1 | |
| C4722-24 | F1G1H1020008 | E 1000UF, 50V | 3 | |
| C4741 | F1G1H1020008 | E 1000UF, 50V | 1 | |
| C4742 | F1G1A104A012 | C 0.1UF, K, 10V | 1 | |
| C4743 | F1G1H1020008 | E 1000UF, 50V | 1 | |
| C4744,45 | F1G1A104A012 | C 0.1UF, K, 10V | 2 | |
| C4746 | F1G1H1020008 | E 1000UF, 50V | 1 | |
| C4751-55 | F1G1A104A012 | C 0.1UF, K, 10V | 5 | |
| C4761-63 | ECJ1VB1H103K | C 0.001UF, K, 50V | 3 | |
| C4771 | F1G1H1020008 | E 1000UF, 50V | 1 | |
| C4772 | F1G1A104A012 | C 0.1UF, K, 10V | 1 | |
| C4773 | F1G1H1020008 | E 1000UF, 50V | 1 | |
| C4774,75 | F1G1A104A012 | C 0.1UF, K, 10V | 2 | |
| C4776 | F1G1H1020008 | E 1000UF, 50V | 1 | |
| C4777-80 | F1G1A104A012 | C 0.1UF, K, 10V | 4 | |
| C4795-98 | F1G1H1020008 | E 1000UF, 50V | 4 | |
| C5600 | ECJ1VB1C105K | C 0.01UF, K, 16V | 1 | |
| C5601 | F1G1C104A081 | C 0.10UF, K, 16V | 1 | |
| C5602 | ECGRL0G680ER | C 68PF, J, 4V | 1 | |

| Ref. No. | Part No. | Part Name & Description | Pcs | Remarks |
|---|---|---|---|---|
| C5603,04 | F1G1E1030005 | C 0.01UF, Z, 25V | 2 | |
| C5605 | F1J1A475A039 | C 4.7UF, K, 10V | 1 | |
| C5606 | F1H1H471A219 | E 470UF, 50V | 1 | |
| C5607 | F1G1H221A459 | E 220UF, 50V | 1 | |
| C5608 | F1G1C104A081 | C 0.10UF, K, 16V | 1 | |
| C5609,10 | EEEHB1C470P | C 47PF, J, 16V | 2 | |
| C5613 | F1H0J1050012 | C 1UF, K, 16V | 1 | |
| C5614 | F1G1C104A081 | C 0.10UF, K, 16V | 1 | |
| C5615 | F1J1A106A043 | C 0.010UF, K, 16V | 1 | |
| C5616 | ECJ0EB1A473K | C 0.047UF, K, 10V | 1 | |
| C5617 | ECJ1VB1C105K | C 0.01UF, K, 16V | 1 | |
| C5618,19 | F1J1A106A043 | C 0.010UF, K, 16V | 2 | |
| C5620 | ECJ1VB1E104K | C 0.10UF, K, 25V | 1 | |
| C5621 | F1G1E1030005 | C 0.01UF, Z, 25V | 1 | |
| C5622 | F1J1A475A039 | C 4.7UF, K, 10V | 1 | |
| C5623 | ECJ0EB1H471K | C 470PF, K, 50V | 1 | |
| C5624 | F1G1H221A459 | E 220UF, 50V | 1 | |
| C5625 | F1G1E1030005 | C 0.01UF, Z, 25V | 1 | |
| C5626,27 | F1G1C104A081 | C 0.10UF, K, 16V | 2 | |
| C5628,29 | ECGRL0G680ER | C 68PF, J, 4V | 2 | |
| C5630,31 | EEEHB1C470P | C 47PF, J, 16V | 2 | |
| C5632 | ECJ1VB1C105K | C 0.01UF, K, 16V | 1 | |
| C5636-41 | F1G1C104A081 | C 0.10UF, K, 16V | 6 | |
| C5643,44 | F1G1C104A081 | C 0.10UF, K, 16V | 2 | |
| C5646 | F1H0J1050012 | C 1UF, K, 16V | 1 | |
| C5647 | EEEHB0G101R | C 100PF, J, 4V | 1 | |
| C5648 | ECJ0EB1C103K | C 0.010UF, K, 16V | 1 | |
| C5649,50 | F1H0J1050012 | C 1UF, K, 16V | 2 | |
| C5652 | ECJ1XC1H102J | C 1000PF, J, 50V | 1 | |
| C5654 | ECJ1VB1H472K | C 4700PF, K, 50V | 1 | |
| C5655 | EEEHB1V220P | E 22UF, 35V | 1 | |
| C5656 | ECJ1VB1H103K | C 0.001UF, K, 50V | 1 | |
| C5657 | F1H1A225A051 | E 22UF, 50V | 1 | |
| C5658 | F1G1E1030005 | C 0.01UF, Z, 25V | 1 | |
| C5660 | ECJ3XB1C106M | C 1.0UF, K, 16V | 1 | |
| C5661,62 | F1J1H474A757 | C 0.47UF, 50V | 2 | |
| C5765 | ECJ0EB1A473K | C 0.047UF, K, 10V | 1 | |
| C5766,67 | ECJ0EB1C103K | C 0.010UF, K, 16V | 2 | |
| C6001 | F1L2J332A022 | C 3300UF, K,6.3V | 1 | |
| C6002 | F1L2J222A022 | C 2200UF, K,6.3V | 1 | |
| C6011-15 | F2A2T201A002 | E 200UF, | 5 | |
| C6021,22 | F1L2J272A022 | C 2700UF, K,6.3V | 2 | |
| C6031 | F0C2E225A218 | E 0.022UF, 250V | 1 | |
| C6037 | F1L1E4750004 | C 4.7UF, 25V | 1 | |
| C6091 | F1L2J1020001 | C 1000UF, K,6.3V | 1 | |
| C6111,12 | F2A2D221A022 | E 220UF, 200V | 2 | |
| C6132 | F1L1E4750004 | C 4.7UF, 25V | 1 | |
| C6134,35 | F1L1E4750004 | C 4.7UF, 25V | 2 | |
| C6151 | ECJ3YB1E105K | C 1UF, K, 25V | 1 | |
| C6152-54 | F1L1E4750004 | C 4.7UF, 25V | 3 | |
| C6193-95 | F1L1E4750004 | C 4.7UF, 25V | 3 | |
| C6197 | F1L1E4750004 | C 4.7UF, 25V | 1 | |
| C6201,02 | F0C2E405A176 | E 0.040UF, 250V | 2 | |
| C6209 | F1L1E4750004 | C 4.7UF, 25V | 1 | |
| C6211,12 | F1L1E4750004 | C 4.7UF, 25V | 2 | |
| C6213 | F2A1E102A220 | E 1000UF, 25V | 1 | |
| C6220 | F1L2J1020001 | C 1000UF, K,6.3V | 1 | |
| C6221 | ECJ2XB1H104K | C 0.1UF, K, 50V | 1 | |
| C6241 | F2A1A101A439 | E 100UF, 10V | 1 | |
| C6242 | F1H1C105A072 | C 1UF, K, 16V | 1 | |
| C6243 | ECJ2VB1H103K | C 0.01UF, K, 50V | 1 | |
| C6251 | F1H1C105A072 | C 1UF, K, 16V | 1 | |
| C6252 | ECJ3YB1E105K | C 1UF, K, 25V | 1 | |
| C6261,62 | F2A2A221A073 | E 220UF, 100V | 2 | |
| C6272,73 | F2A1E221A487 | E 220UF, 25V | 2 | |
| C6276 | F1L1E4750004 | C 4.7UF, 25V | 1 | |
| C6286-89 | ECJ2XB1H104K | C 0.1UF, K, 50V | 4 | |

| Ref. No. | Part No. | Part Name & Description | Pcs | Remarks |
|---|---|---|---|---|
| C6401 | F1L2J332A022 | C 3300UF, K,6.3V | 1 | |
| C6402 | F1L2J222A022 | C 2200UF, K,6.3V | 1 | |
| C6411-15 | F2A2T201A002 | E 200UF, | 5 | |
| C6421,22 | F1L2J272A022 | C 2700UF, K,6.3V | 2 | |
| C6431 | F0C2E405A176 | E 0.040UF, 250V | 1 | |
| C6480 | ECJ2XB1H104K | C 0.1UF, K, 50V | 1 | |
| C6502 | F1L1E4750004 | C 4.7UF, 25V | 1 | |
| C6504,05 | F1L1E4750004 | C 4.7UF, 25V | 2 | |
| C6521 | ECJ3YB1E105K | C 1UF, K, 25V | 1 | |
| C6522 | F1L1E4750004 | C 4.7UF, 25V | 1 | |
| C6524,25 | F1L1E4750004 | C 4.7UF, 25V | 2 | |
| C6527 | F1L1E4750004 | C 4.7UF, 25V | 1 | |
| C6531,32 | F0C2E405A176 | E 0.040UF, 250V | 2 | |
| C6561 | F2A1A101A439 | E 100UF, 10V | 1 | |
| C6562 | F1H1C105A072 | C 1UF, K, 16V | 1 | |
| C6563 | F2A1A101A439 | E 100UF, 10V | 1 | |
| C6564 | F1H1C105A072 | C 1UF, K, 16V | 1 | |
| C6565,66 | ECJ2VB1H103K | C 0.01UF, K, 50V | 2 | |
| C6581 | ECJ3YB1E105K | C 1UF, K, 25V | 1 | |
| C6582 | F1H1C105A072 | C 1UF, K, 16V | 1 | |
| C6592 | F2A1E221A487 | E 220UF, 25V | 1 | |
| C6593 | ECJ2XC1H102J | C 1000PF, J, 50V | 1 | |
| C6603,04 | F1K2J102A014 | C 1000UF, K,6.3V | 2 | |
| C6605,06 | F1L2J472A022 | C 4700UF, K,6.3V | 2 | |
| C6620,21 | F1E2J222A002 | C 2200PF, 600V | 2 | |
| C6641 | ECQE2224KF3 | P 2.2UF, K,250V | 1 | |
| C6661,62 | F1K2J102A014 | C 1000UF, K,6.3V | 2 | |
| C6671 | F1L1E4750004 | C 4.7UF, 25V | 1 | |
| C6691 | ECA2CM101 | E 100UF, 160V | 1 | |
| C6694 | ECJ3YB1E105K | C 1UF, K, 25V | 1 | |
| C6695 | ECJ2XC1H102J | C 1000PF, J, 50V | 1 | |
| C6702-06 | ECJ2XB1H104K | C 0.1UF, K, 50V | 5 | |
| C6708 | ECJ2XB1H104K | C 0.1UF, K, 50V | 1 | |
| C6721 | ECA1HM101 | E 100UF, 50V | 1 | |
| C6722 | ECJ2XC1H101J | C 100PF, J, 50V | 1 | |
| C6723-25 | F1L1E4750004 | C 4.7UF, 25V | 3 | |
| C6726,27 | F1H1C105A072 | C 1UF, K, 16V | 2 | |
| C6740 | ECJ2XC1H101J | C 100PF, J, 50V | 1 | |
| C6752 | ECJ3YB1E105K | C 1UF, K, 25V | 1 | |
| C6753 | F1L1E4750004 | C 4.7UF, 25V | 1 | |
| C6755,56 | F1L1E4750004 | C 4.7UF, 25V | 2 | |
| C6771 | F1H1C105A072 | C 1UF, K, 16V | 1 | |
| C6772,73 | F1L1E4750004 | C 4.7UF, 25V | 2 | |
| C6775 | F1L1E4750004 | C 4.7UF, 25V | 1 | |
| C6776,77 | ECJ2XB1H104K | C 0.1UF, K, 50V | 2 | |
| C6791 | F2A1E221A487 | E 220UF, 25V | 1 | |
| C6795,96 | F2A1E221A487 | E 220UF, 25V | 2 | |
| C6801 | F2A2E470A022 | E 47UF, 250V | 1 | |
| C6803 | ECKD3D221KBP | C 220PF, K, 2KV | 1 | |
| C6804 | F2A2E100A022 | E 10UF, 250V | 1 | |
| C6805 | ECJ2XC1H331J | C 330PF, J, 50V | 1 | |
| C6806 | ECA2CM101 | E 100UF, 160V | 1 | |
| C6811 | ECJ3YB1E105K | C 1UF, K, 25V | 1 | |
| C6812 | F1L1E4750004 | C 4.7UF, 25V | 1 | |
| C6813 | ECA2CM101 | E 100UF, 160V | 1 | |
| C6814 | F2A1E221A487 | E 220UF, 25V | 1 | |
| C6815 | ECJ2XC1H102J | C 1000PF, J, 50V | 1 | |
| C6822 | F2A2G470A018 | E 470UF, 400V | 1 | |
| C6823 | ECJ2VB1H103K | C 0.01UF, K, 50V | 1 | |
| C6832 | ECJ2XB1H392K | C 3900PF, K, 50V | 1 | |
| C6841 | F2A2E470A022 | E 47UF, 250V | 1 | |
| C6842 | ECA2CM101 | E 100UF, 160V | 1 | |
| C6845 | ECJ2VB1H103K | C 0.01UF, K, 50V | 1 | |
| C6861 | F1H1C105A072 | C 1UF, K, 16V | 1 | |
| C6862 | ECJ3YB1E105K | C 1UF, K, 25V | 1 | |
| C6863 | ECJ2VB1H103K | C 0.01UF, K, 50V | 1 | |
| C6871 | F1H1C105A072 | C 1UF, K, 16V | 1 | |
| C6872 | ECJ3YB1E105K | C 1UF, K, 25V | 1 | |
| C6873 | ECJ2VB1H103K | C 0.01UF, K, 50V | 1 | |
| C6901 | ECJ2XB1H102K | C 1000PF, K, 50V | 1 | |
| C6902 | TCUY1C105ZFN | C 1UF, 16V | 1 | |
| C6904 | TCUY1C105ZFN | C 1UF, 16V | 1 | |
| C6906 | TCUY1C105ZFN | C 1UF, 16V | 1 | |

| Ref. No. | Part No. | Part Name & Description | Pcs | Remarks |
|---|---|---|---|---|
| C6908 | TCUY1C105ZFN | C 1UF, 16V | 1 | |
| C6910 | TCUY1C105ZFN | C 1UF, 16V | 1 | |
| C6912 | TCUY1C105ZFN | C 1UF, 16V | 1 | |
| C6921 | F1L2E1040002 | E 1000UF, 25V | 1 | |
| C6923,24 | F1L2E1040002 | E 1000UF, 25V | 2 | |
| C6926,27 | F1L2E1040002 | E 1000UF, 25V | 2 | |
| C6929 | F1L2E1040002 | E 1000UF, 25V | 1 | |
| C6931 | ECJ2XB1H102K | C 1000PF, K, 50V | 1 | |
| C6936 | ECJ2XB1H681K | C 680PF, K, 50V | 1 | |
| C6937 | ECJ2VB1H221K | C 220PF, K, 50V | 1 | |
| C6951 | ECJ2XB1H102K | C 1000PF, K, 50V | 1 | |
| C6952 | TCUY1C105ZFN | C 1UF, 16V | 1 | |
| C6955 | TCUY1C105ZFN | C 1UF, 16V | 1 | |
| C6957,58 | TCUY1C105ZFN | C 1UF, 16V | 2 | |
| C6961 | TCUY1C105ZFN | C 1UF, 16V | 1 | |
| C6963 | TCUY1C105ZFN | C 1UF, 16V | 1 | |
| C6971 | F1L2E1040002 | E 1000UF, 25V | 1 | |
| C6973,74 | F1L2E1040002 | E 1000UF, 25V | 2 | |
| C6976,77 | F1L2E1040002 | E 1000UF, 25V | 2 | |
| C6979 | F1L2E1040002 | E 1000UF, 25V | 1 | |
| C6981 | ECJ2XB1H102K | C 1000PF, K, 50V | 1 | |
| C6986 | ECJ2XB1H681K | C 680PF, K, 50V | 1 | |
| C6987 | ECJ2VB1H221K | C 220PF, K, 50V | 1 | |
| C7110 | F1H1C105A072 | C 1UF, K, 16V | 1 | |
| C7114 | F1H1C105A072 | C 1UF, K, 16V | 1 | |
| C7116 | F1H1C105A072 | C 1UF, K, 16V | 1 | |
| C7117 | ECJ1XC1H101J | C 100PF, J, 50V | 1 | |
| C7118 | F1K2A474A006 | C 0.47UF, 6.3V | 1 | |
| C7121 | F1H1C105A072 | C 1UF, K, 16V | 1 | |
| C7123 | F1H1C105A072 | C 1UF, K, 16V | 1 | |
| C7124 | ECJ1XC1H101J | C 100PF, J, 50V | 1 | |
| C7125 | F1K2A474A006 | C 0.47UF, 6.3V | 1 | |
| C7126 | F1H1C105A072 | C 1UF, K, 16V | 1 | |
| C7127 | ECJ1XC1H101J | C 100PF, J, 50V | 1 | |
| C7128 | F1K2A474A006 | C 0.47UF, 6.3V | 1 | |
| C7130 | ECJ1XB1C104K | C 0.1UF, Z, 16V | 1 | |
| C7140 | F1H1C105A072 | C 1UF, K, 16V | 1 | |
| C7141 | ECJ1XC1H101J | C 100PF, J, 50V | 1 | |
| C7142 | F1K2A474A006 | C 0.47UF, 6.3V | 1 | |
| C7145 | F1H1C105A072 | C 1UF, K, 16V | 1 | |
| C7148 | ECJ1XB1C104K | C 0.1UF, Z, 16V | 1 | |
| C7150-53 | F1K2A474A006 | C 0.47UF, 6.3V | 4 | |
| C7203 | F1H1C105A072 | C 1UF, K, 16V | 1 | |
| C7207 | F1H1C105A072 | C 1UF, K, 16V | 1 | |
| C7209 | F1H1C105A072 | C 1UF, K, 16V | 1 | |
| C7210 | ECJ1XC1H101J | C 100PF, J, 50V | 1 | |
| C7211 | F1K2A474A006 | C 0.47UF, 6.3V | 1 | |
| C7214 | F1H1C105A072 | C 1UF, K, 16V | 1 | |
| C7216 | F1H1C105A072 | C 1UF, K, 16V | 1 | |
| C7217 | ECJ1XC1H101J | C 100PF, J, 50V | 1 | |
| C7218 | F1K2A474A006 | C 0.47UF, 6.3V | 1 | |
| C7219 | F1H1C105A072 | C 1UF, K, 16V | 1 | |
| C7220 | ECJ1XC1H101J | C 100PF, J, 50V | 1 | |
| C7221 | F1K2A474A006 | C 0.47UF, 6.3V | 1 | |
| C7229 | ECJ1XB1C104K | C 0.1UF, Z, 16V | 1 | |
| C7230-33 | F1K2A474A006 | C 0.47UF, 6.3V | 4 | |
| C7235 | F1H1C105A072 | C 1UF, K, 16V | 1 | |
| C7236 | ECJ1XC1H101J | C 100PF, J, 50V | 1 | |
| C7237 | F1K2A474A006 | C 0.47UF, 6.3V | 1 | |
| C7240 | F1H1C105A072 | C 1UF, K, 16V | 1 | |
| C7242 | F1K2A474A006 | C 0.47UF, 6.3V | 1 | |
| C7244,45 | ECJ1XB1C104K | C 0.1UF, Z, 16V | 2 | |
| C7701 | F1G1H330A565 | E 33UF, 50V | 1 | PAVCA |
| C7702 | F2G0G470A007 | E 47UF 6.3V | 1 | |
| C7703 | F1G1H330A565 | E 33UF, 50V | 1 | PAVCA |
| C7705 | F1G1C104A083 | C 0.10UF, K, 16V | 1 | |
| C7708,09 | F1G1C104A083 | C 0.10UF, K, 16V | 2 | |
| C7726,27 | F1G1H330A565 | E 33UF, 50V | 2 | PAVCA |
| C7729,30 | F1J0J106A020 | C 0.010UF, K, 16V | 2 | |
| C8001 | F1G1A104A012 | C 0.1UF, K, 10V | 1 | |
| C8002-05 | ECJ1VB0J105K | C 1UF, K, 16V | 4 | |
| C8006-08 | F1G1A104A012 | C 0.1UF, K, 10V | 3 | |

| Ref. No. | Part No. | Part Name & Description | Pcs | Remarks |
|---|---|---|---|---|
| C8009,10 | F1J1A106A043 | C 0.010UF, K, 16V | 2 | |
| C8011-14 | F1G1A104A012 | C 0.1UF, K, 10V | 4 | |
| C8015,16 | ECJ1VB0J105K | C 1UF, K, 16V | 2 | |
| C8017 | F1J1A106A043 | C 0.010UF, K, 16V | 1 | |
| C8018-21 | F1G1A104A012 | C 0.1UF, K, 10V | 4 | |
| C8022 | ECJ1VB0J105K | C 1UF, K, 16V | 1 | |
| C8023,24 | F1J1A106A043 | C 0.010UF, K, 16V | 2 | |
| C8025-29 | F1G1A104A012 | C 0.1UF, K, 10V | 5 | |
| C8030,31 | ECJ1VB0J105K | C 1UF, K, 16V | 2 | |
| C8032 | F1J1A106A043 | C 0.010UF, K, 16V | 1 | |
| C8033,34 | F1G1A104A012 | C 0.1UF, K, 10V | 2 | |
| C8035,36 | F1J1A106A043 | C 0.010UF, K, 16V | 2 | |
| C8037-41 | F1G1A104A012 | C 0.1UF, K, 10V | 5 | |
| C8042 | ECGRL0G680ER | C 68PF, J, 4V | 1 | |
| C8043-51 | F1G1A104A012 | C 0.1UF, K, 10V | 9 | |
| C8052 | ECJ1VB0J105K | C 1UF, K, 16V | 1 | |
| C8053 | ECJ0EB1C103K | C 0.010UF, K, 16V | 1 | |
| C8056,57 | F1G1A104A012 | C 0.1UF, K, 10V | 2 | |
| C8058 | F1J1A106A043 | C 0.010UF, K, 16V | 1 | |
| C8067 | ECJ0EB1C103K | C 0.010UF, K, 16V | 1 | |
| C8068 | F1G1A104A012 | C 0.1UF, K, 10V | 1 | |
| C8070-74 | F1G1A104A012 | C 0.1UF, K, 10V | 5 | |
| C8075 | F1J0G2260001 | C 0.001UF, 6.3V | 1 | |
| C8076-80 | F1G1C104A081 | C 0.10UF, K, 16V | 5 | |
| C8300 | F1G1A104A012 | C 0.1UF, K, 10V | 1 | |
| C8301 | F1G1H1020008 | E 1000UF, 50V | 1 | |
| C8302 | F1G1A104A012 | C 0.1UF, K, 10V | 1 | |
| C8303 | F1G1H103A573 | E 0.01UF, 50V | 1 | PAVCA |
| C8304,05 | F1G1H820A565 | E 82UF, 50V | 2 | |
| C8306 | F1G1H100A565 | C 100PF, K, 50V | 1 | |
| C8307 | F1G1A104A012 | C 0.1UF, K, 10V | 1 | |
| C8309,10 | EEEHB0J221UP | C 220PF, J, 6.3V | 2 | |
| C8311 | F2G1V220A020 | E 22UF, 35V | 1 | |
| C8312 | EEEHB0J221UP | C 220PF, J, 6.3V | 1 | |
| C8313 | F1G1H1020008 | E 1000UF, 50V | 1 | |
| C8320,21 | F1G1H1020008 | E 1000UF, 50V | 2 | |
| C8324 | F1G1H270A565 | E 27UF, 50V | 1 | PAVCA |
| C8327,28 | F1G1H120A565 | E 12UF, 50V | 2 | |
| C8329 | F1G1H270A565 | E 27UF, 50V | 1 | PAVCA |
| C8330,31 | F1G1H101A565 | C 100PF, K, 50V | 2 | |
| C8333,34 | F1G1H470A565 | E 47UF, 50V | 2 | |
| C8335,36 | ECJ0EB1C103K | C 0.010UF, K, 16V | 2 | |
| C8337 | F1G1H100A565 | C 100PF, K, 50V | 1 | |
| C8338 | F1G1H120A565 | E 12UF, 50V | 1 | |
| C8339-42 | F1G1A104A012 | C 0.1UF, K, 10V | 4 | |
| C8344-49 | F1G1A104A012 | C 0.1UF, K, 10V | 6 | |
| C8350 | F1J1A106A043 | C 0.010UF, K, 16V | 1 | |
| C8351-57 | F1G1A104A012 | C 0.1UF, K, 10V | 7 | |
| C8359-61 | F1G1A104A012 | C 0.1UF, K, 10V | 3 | |
| C8363-65 | F1G1A104A012 | C 0.1UF, K, 10V | 3 | |
| C8367-71 | F1G1A104A012 | C 0.1UF, K, 10V | 5 | |
| C8372 | ECJ1VB0J105K | C 1UF, K, 16V | 1 | |
| C8374-76 | F1J1A106A043 | C 0.010UF, K, 16V | 3 | |
| C8377-85 | F1G1A104A012 | C 0.1UF, K, 10V | 9 | |
| C8386 | F1J1A106A043 | C 0.010UF, K, 16V | 1 | |
| C8387 | F1G1H1020008 | E 1000UF, 50V | 1 | |
| C8388 | ECJ1XB1H104K | C 10PF, J, 50V | 1 | |
| C8394 | F1G1A104A012 | C 0.1UF, K, 10V | 1 | |
| C8396 | F1J1A106A043 | C 0.010UF, K, 16V | 1 | |
| C8397 | F1G1A104A012 | C 0.1UF, K, 10V | 1 | |
| C8500,01 | F1G1A104A012 | C 0.1UF, K, 10V | 2 | |
| C8506 | F1G1A104A012 | C 0.1UF, K, 10V | 1 | |

| Ref. No. | Part No. | Part Name & Description | Pcs | Remarks |
|---|---|---|---|---|
| C8513 | ECJ0EB1C103K | C 0.010UF, K, 16V | 1 | |
| C8517 | F1G1A104A012 | C 0.1UF, K, 10V | 1 | |
| C8519 | ECJ0EB1C103K | C 0.010UF, K, 16V | 1 | |
| C9028,29 | F1J1A106A043 | C 0.010UF, K, 16V | 2 | |
| C9033,34 | F1G1C104A083 | C 0.10UF, K, 16V | 2 | |
| C9035,36 | F1J1A106A043 | C 0.010UF, K, 16V | 2 | |
| C9037 | F1G1E1030005 | C 0.01UF, Z, 25V | 1 | |
| C9039 | F1J1A106A043 | C 0.010UF, K, 16V | 1 | |
| C9040 | F1G1C104A083 | C 0.10UF, K, 16V | 1 | |
| C9044 | ECJ2YB0J475K | C 3.3UF, Z, 4.7V | 1 | |
| C9045-53 | F1G1C104A083 | C 0.10UF, K, 16V | 9 | |
| C9055-57 | F1G1C104A083 | C 0.10UF, K, 16V | 3 | |
| C9058 | F1J1A106A043 | C 0.010UF, K, 16V | 1 | |
| C9061 | F1G1C104A077 | C 0.10UF, K, 16V | 1 | |
| C9062 | ECJ2YB0J475K | C 3.3UF, Z, 4.7V | 1 | |
| C9063 | F1G1C104A083 | C 0.10UF, K, 16V | 1 | |
| C9468 | F1G1E1030005 | C 0.01UF, Z, 25V | 1 | |
| C9469 | F1G1C104A083 | C 0.10UF, K, 16V | 1 | |
| C9500 | F1G1C104A077 | C 0.10UF, K, 16V | 1 | |
| C9505 | F1G1C104A077 | C 0.10UF, K, 16V | 1 | |
| C9508 | F1G1C104A077 | C 0.10UF, K, 16V | 1 | |
| C9509,10 | F1G1H120A565 | E 12UF, 50V | 2 | |
| C9511 | F1J1A106A043 | C 0.010UF, K, 16V | 1 | |
| C9516-25 | F1G1C104A077 | C 0.10UF, K, 16V | 10 | |
| C9526 | F1J1A106A043 | C 0.010UF, K, 16V | 1 | |
| C9527,28 | F1G1C104A077 | C 0.10UF, K, 16V | 2 | |
| C9531 | F1J1A106A043 | C 0.010UF, K, 16V | 1 | |
| C9559-64 | F1G1C104A077 | C 0.10UF, K, 16V | 6 | |
| C9823 | ECJ3YB1E106M | C 10 UF, K, 25V | 1 | |
| C9825 | F1G1H101A565 | C 100PF, K, 50V | 1 | |
| C9832 | F1J1A106A043 | C 0.010UF, K, 16V | 1 | |
| C9837 | F1J1A106A043 | C 0.010UF, K, 16V | 1 | |
| C9838 | F1G1C104A083 | C 0.10UF, K, 16V | 1 | |
| C9840 | F1G1E1030005 | C 0.01UF, Z, 25V | 1 | |
| C9841-43 | F1G1C104A083 | C 0.10UF, K, 16V | 3 | |
| C9844 | F1G1E1030005 | C 0.01UF, Z, 25V | 1 | |
| C9845,46 | F1G1C104A083 | C 0.10UF, K, 16V | 2 | |
| C9858 | ECJ3YB1E106M | C 10 UF, K, 25V | 1 | |
| C9859 | F1G1E1030005 | C 0.01UF, Z, 25V | 1 | |
| C9860 | ECJ2YB0J475K | C 3.3UF, Z, 4.7V | 1 | |
| C9861,62 | ECJ1VB1E104K | C 0.10UF, K, 25V | 2 | |
| C9863 | ECJ2YB0J475K | C 3.3UF, Z, 4.7V | 1 | |
| C9864 | ECJ1VB1E104K | C 0.10UF, K, 25V | 1 | |
| C9865,66 | ECGRL0G680ER | C 68PF, J, 4V | 2 | |
| C9867-72 | ECJ3YB1E106M | C 10 UF, K, 25V | 6 | |
| C9873 | ECGRL0G680ER | C 68PF, J, 4V | 1 | |
| C9874 | F1G1H680A565 | E 68UF, 50V | 1 | |
| C9877 | F1G1H680A565 | E 68UF, 50V | 1 | |
| C9878 | F1G1E1030005 | C 0.01UF, Z, 25V | 1 | |
| C9879,80 | F1G1E822A086 | C 8200UF, Z, 25V | 2 | |
| C9881 | F1G1E1030005 | C 0.01UF, Z, 25V | 1 | |
| C9882 | F1G1E822A086 | C 8200UF, Z, 25V | 1 | |
| C9883 | F1G1H101A565 | C 100PF, K, 50V | 1 | |
| C9884,85 | F1G1H1020008 | E 1000UF, 50V | 2 | |
| C9886,87 | ECJ1VB1E104K | C 0.10UF, K, 25V | 2 | |
| C9888 | F1G1H361A565 | E 360UF, 50V | 1 | |
| C9900-25 | F1G1C104A077 | C 0.10UF, K, 16V | 26 | |
| C9927-51 | F1G1C104A077 | C 0.10UF, K, 16V | 25 | |
| C9955-59 | F1G1C104A077 | C 0.10UF, K, 16V | 5 | |
| C9960-64 | F1J1A106A043 | C 0.010UF, K, 16V | 5 | |
| C9966,67 | F1G1C104A077 | C 0.10UF, K, 16V | 2 | |
| | | | | |
| CB1-B8 | K1MN68BA0052 | 68P CONNECTOR | 8 | |

| Ref. No. | Part No. | Part Name & Description | Pcs | Remarks |
|---|---|---|---|---|
| | | | | |
| D5 | K1KB31BA0064 | 31P CONNECTOR | 1 | |
| D6 | K1KA21A00011 | 21P CONNECTOR | 1 | |
| D9 | K1KA07A00292 | 7P CONNECTOR | 1 | |
| D20 | K1KY30BA0090 | 30P CONNECTOR | 1 | |
| D25 | K1KA13B00069 | 13P CONNECTOR | 1 | |
| D31,32 | K1MN55BA0257 | 55P CONNECTOR | 2 | |
| D1107 | MA704A | DIODE | 1 | |
| D1111-13 | MA2J11100L | DIODE | 3 | |
| D1120 | MA2J72800L | DIODE | 1 | |
| D2059 | MA2J11100L | DIODE | 1 | |
| D2062-64 | MA2J11100L | DIODE | 3 | |
| D2066 | MA2J11100L | DIODE | 1 | |
| D2301,02 | MA2J11100L | DIODE | 2 | |
| D2303 | MA3056H | ZENER DIODE | 1 | |
| D2304 | MA2J11100L | DIODE | 1 | |
| D2512 | MA8043LTX | ZENER DIODE | 1 | |
| D2520A | LN1271RAL-TR | LED | 1 | |
| D2524 | MAZ80560ML | ZENER DIODE | 1 | |
| D3005 | K7AAAY000003 | PHOTO LINK | 1 | |
| D3047-52 | MA8140M | ZENER DIODE | 6 | |
| D3060-80 | MA8140M | ZENER DIODE | 21 | |
| D3085-89 | MA8140M | ZENER DIODE | 5 | |
| D3500 | B0BC01000035 | ZENER DIODE | 1 | PAVCA |
| D3502 | MA2J11100L | DIODE | 1 | |
| D3503,04 | MA3X152A0L | DIODE | 2 | |
| D3505 | MA8120M | ZENER DIODE | 1 | |
| D3506 | MAZ80680LL | ZENER DIODE | 1 | |
| D3507 | MA2J11100L | DIODE | 1 | |
| D3514 | B0BC6R600005 | ZENER DIODE | 1 | |
| D3515 | B0BC01100001 | ZENER DIODE | 1 | |
| D3702 | MA8140M | ZENER DIODE | 1 | |
| D4500-12 | EZAEG2A50AX | DIODE | 13 | |
| D4513 | MA3056MTX | ZENER DIODE | 1 | |
| D4514 | EZAEG2A50AX | DIODE | 1 | |
| D4515 | MA3056MTX | ZENER DIODE | 1 | |
| D4516-23 | EZAEG2A50AX | DIODE | 8 | |
| D4524-27 | B0HCMM000014 | DIODE | 4 | |
| D4528 | EZAEG2A50AX | DIODE | 1 | |
| D4532 | B0HCMM000014 | DIODE | 1 | |
| D5024,25 | MA2J11100L | DIODE | 2 | |
| D5601,02 | MA22D3900L | DIODE | 2 | |
| D5603,04 | B0JCDD000002 | DIODE | 2 | |
| D5605 | MA22D3900L | DIODE | 1 | |
| D5606 | B0JCDD000002 | DIODE | 1 | |
| D5607,08 | MA8024LTX | ZENER DIODE | 2 | |
| D5609 | B0HCMM000014 | DIODE | 1 | |
| D5610 | MA3X78900L | ZENER DIODE | 1 | |
| D5611 | B0BC03900015 | ZENER DIODE | 1 | |
| D5612 | MA8056LTX | ZENER DIODE | 1 | |
| D6001 | B0HBSN000008 | DIODE | 1 | |
| D6021 | MA3DF30000LZ | ZENER DIODE | 1 | |
| D6024,25 | B0ECHP000003 | DIODE | 2 | |
| D6032 | MA2J11100L | DIODE | 1 | |
| D6061,62 | MA3DF30000LZ | ZENER DIODE | 2 | |
| D6071,72 | B0HBSN000008 | DIODE | 2 | |
| D6082 | MA3DF30000LZ | ZENER DIODE | 1 | |
| D6091 | B0HBSN000008 | DIODE | 1 | |
| D6092 | B0ECHP000003 | DIODE | 1 | |
| D6101 | B0JCME000037 | DIODE | 1 | |
| D6104 | B0JCME000037 | DIODE | 1 | |
| D6131,32 | B0ECHP000003 | DIODE | 2 | |
| D6151-53 | B0ECHP000003 | DIODE | 3 | |
| D6191 | B0ECHP000003 | DIODE | 1 | |
| D6193 | B0ECHP000003 | DIODE | 1 | |
| D6211 | B0JCME000037 | DIODE | 1 | |
| D6221 | B0ECHP000003 | DIODE | 1 | |
| D6222,23 | MA2J11100L | DIODE | 2 | |
| D6253 | LNJ301MPUJA | LED | 1 | |
| D6254 | MAZ80510LL | ZENER DIODE | 1 | |
| D6255 | MA2J11100L | DIODE | 1 | |
| D6273 | MA2J11100L | DIODE | 1 | |
| D6275 | MA8068M | ZENER DIODE | 1 | |

| Ref. No. | Part No. | Part Name & Description | Pcs | Remarks |
|---|---|---|---|---|
| D6276 | MA3X152A0L | DIODE | 1 | |
| D6278 | MA3X152A0L | DIODE | 1 | |
| D6280 | MAZ80510LL | ZENER DIODE | 1 | |
| D6281 | B0JCME000037 | DIODE | 1 | |
| D6401,02 | B0HBSN000008 | DIODE | 2 | |
| D6422 | MA3DF40000LZ | ZENER DIODE | 1 | |
| D6441 | B0ECHP000003 | DIODE | 1 | |
| D6451 | B0ECHP000003 | DIODE | 1 | |
| D6461,62 | MA3DF30000LZ | ZENER DIODE | 2 | |
| D6466 | MA2J11100L | DIODE | 1 | |
| D6471 | B0HBSN000008 | DIODE | 1 | |
| D6472 | B0ECHP000003 | DIODE | 1 | |
| D6477 | MA2J11100L | DIODE | 1 | |
| D6478 | B0HCKS000002 | DIODE | 1 | |
| D6480 | MA2J11100L | DIODE | 1 | |
| D6481 | MA3DF30000LZ | ZENER DIODE | 1 | |
| D6491 | MA3DF40000LZ | ZENER DIODE | 1 | |
| D6497 | B0ECHP000003 | DIODE | 1 | |
| D6501 | B0ECHP000003 | DIODE | 1 | |
| D6503 | B0ECHP000003 | DIODE | 1 | |
| D6521-23 | B0ECHP000003 | DIODE | 3 | |
| D6583 | LNJ301MPUJA | LED | 1 | |
| D6584 | MAZ80510LL | ZENER DIODE | 1 | |
| D6585 | MA2J11100L | DIODE | 1 | |
| D6604 | MA2J11100L | DIODE | 1 | |
| D6605 | MAZ80510LL | ZENER DIODE | 1 | |
| D6606 | B0HCMM000014 | DIODE | 1 | |
| D6607 | MA2J11100L | DIODE | 1 | |
| D6619 | B0HCKS000002 | DIODE | 1 | |
| D6621 | B0HDSM000005 | DIODE | 1 | |
| D6623,24 | B0HDSM000005 | DIODE | 2 | |
| D6631,32 | MA8240MTX | ZENER DIODE | 2 | |
| D6641,42 | B0HCKS000002 | DIODE | 2 | |
| D6643 | B0JCME000037 | DIODE | 1 | |
| D6644 | B0HCKS000002 | DIODE | 1 | |
| D6661 | MA2J11100L | DIODE | 1 | |
| D6662-64 | MA8330M | ZENER DIODE | 3 | |
| D6665 | MAZ80510LL | ZENER DIODE | 1 | |
| D6666,67 | MA2J11100L | DIODE | 2 | |
| D6670,71 | B0JCME000037 | DIODE | 2 | |
| D6690 | MA2J11100L | DIODE | 1 | |
| D6691,92 | MA8200M | ZENER DIODE | 2 | |
| D6701 | MA8056H | ZENER DIODE | 1 | |
| D6702,03 | MA2J11100L | DIODE | 2 | |
| D6721 | B0HCKS000002 | DIODE | 1 | |
| D6722 | MA2J11100L | DIODE | 1 | |
| D6725 | B0ECHP000003 | DIODE | 1 | |
| D6726-33 | MA8056H | ZENER DIODE | 8 | |
| D6761 | B0JCME000037 | DIODE | 1 | |
| D6763 | B0ECHP000003 | DIODE | 1 | |
| D6764 | B0HCKS000002 | DIODE | 1 | |
| D6765,66 | B0ECHP000003 | DIODE | 2 | |
| D6773 | B0HCKS000002 | DIODE | 1 | |
| D6791 | MA8200M | ZENER DIODE | 1 | |
| D6802 | B0BC01000044 | ZENER DIODE | 1 | |
| D6804 | B0ECHP000003 | DIODE | 1 | |
| D6805 | MA8240MTX | ZENER DIODE | 1 | |
| D6806 | B0HCKS000002 | DIODE | 1 | |
| D6809 | B0HCMM000014 | DIODE | 1 | |
| D6820-23 | MA2J11100L | DIODE | 4 | |
| D6824,25 | MA8330M | ZENER DIODE | 2 | |
| D6826 | MA2J11100L | DIODE | 1 | |
| D6827,28 | MA8330M | ZENER DIODE | 2 | |
| D6830 | MA8056H | ZENER DIODE | 1 | |
| D6836 | MAZ81500ML | ZENER DIODE | 1 | |
| D6837 | MA2J11100L | DIODE | 1 | |
| D6838 | B0BC027A0234 | ZENER DIODE | 1 | |
| D6839 | B0ECHP000003 | DIODE | 1 | |
| D6841 | B0HCKS000002 | DIODE | 1 | |
| D6842,43 | MA2J11100L | DIODE | 2 | |
| D6859 | B0ECHP000003 | DIODE | 1 | |
| D6860 | B0HCKS000002 | DIODE | 1 | |
| D6861 | MAZ80510LL | ZENER DIODE | 1 | |

| Ref. No. | Part No. | Part Name & Description | Pcs | Remarks |
|---|---|---|---|---|
| D6862 | MA2J11100L | DIODE | 1 | |
| D6871 | MAZ80510LL | ZENER DIODE | 1 | |
| D6872 | MA2J11100L | DIODE | 1 | |
| D6901,02 | MA8056H | ZENER DIODE | 2 | |
| D6903-05 | B0HCMM000013 | DIODE | 3 | |
| D6951,52 | MA8056H | ZENER DIODE | 2 | |
| D6953-55 | B0HCMM000013 | DIODE | 3 | |
| D7103-10 | B0HCMM000014 | DIODE | 8 | |
| D7201-08 | B0HCMM000014 | DIODE | 8 | |
| D9017-19 | MA3033 | ZENER DIODE | 3 | |
| D9020 | B0JCCE000008 | DIODE | 1 | |
| D9110 | B0JCGD000002 | DIODE | 1 | |
| D9802 | B0JCCE000008 | DIODE | 1 | |
| D9804 | B0JCCE000008 | DIODE | 1 | |
| D9807,08 | B0JCCE000008 | DIODE | 2 | |
| D9811 | B0JCCE000008 | DIODE | 1 | |
| D9812 | MA22D3900L | DIODE | 1 | |
| D9813-15 | B0JCGD000002 | DIODE | 3 | |
| D9816,17 | MA22D3900L | DIODE | 2 | |
| | | | | |
| FL3710-12 | J0MAB0000199 | LC FILTER | 3 | |
| FL4000 | J0HAAB000036 | LC FILTER | 1 | |
| FL4003,04 | J0HAAB000036 | LC FILTER | 2 | |
| FL4800-02 | J0JAD0000028 | CHIP INDUCTOR | 3 | |
| FL7101 | J0HABH000013 | LC FILTER | 1 | |
| FL7201 | J0HABH000013 | LC FILTER | 1 | |
| FL8308 | J0MAB0000164 | LC FILTER | 1 | |
| FL8500,01 | J0HAAA000013 | LC FILTER | 2 | |
| FL9300,01 | F1J1E104A148 | C 0.10UF, Z, 25V | 2 | |
| FL9504 | F1J1E104A148 | C 0.10UF, Z, 25V | 1 | |
| FL9803 | F1J1E104A148 | C 0.10UF, Z, 25V | 1 | |
| FL9805,06 | F1J1E104A148 | C 0.10UF, Z, 25V | 2 | |
| FL9900-04 | F1J1E104A148 | C 0.10UF, Z, 25V | 5 | |
| | | | | |
| G51 | K1KA12A00317 | 12P CONNECTOR | 1 | |
| | | | | |
| GS52 | K1KA13A00152 | 13P CONNECTOR | 1 | |
| | | | | |
| IC1100 | MNZSFD7GP42 | IC | 1 | |
| IC1101 | TVRP388S | IC | 1 | PAVCA |
| IC1108 | C0EBF0000354 | IC | 1 | |
| IC2008 | C0CBCBE00001 | IC | 1 | |
| IC2011 | C0ABBB000230 | IC | 1 | |
| IC2106 | C1AB00002747 | IC | 1 | |
| IC2107 | C0DBFFD00003 | IC | 1 | |
| IC2301 | C1AB00002730 | IC | 1 | |
| IC2303 | C0DBGYY00202 | IC | 1 | |
| IC3001 | AN15876A-VT | IC | 1 | |
| IC3101 | AN15862A-VT | IC | 1 | |
| IC3500 | EHMDD9851 | LINEAR IC | 1 | |
| IC4500 | TVRP387S | IC | 1 | PAVCA |
| IC4501 | TVRP386S | IC | 1 | PAVCA |
| IC4504 | C3EBEY000009 | IC | 1 | |
| IC4506 | C0DBGGF00001 | IC | 1 | |
| IC4508,09 | C0CBCAD00082 | IC | 2 | |
| IC4510 | C1AB00002753 | IC | 1 | |
| IC4800 | C1ZBZ0003577 | IC | 1 | |
| IC5600 | C0DBAYY00273 | IC | 1 | |
| IC5601 | C0DBAYY00274 | IC | 1 | |
| IC5602 | C0EBF0000335 | IC | 1 | |
| IC5604 | C0CBCBD00043 | IC | 1 | |
| IC5605 | C0DBAJB00004 | IC | 1 | |
| IC5704 | C0EBM0000026 | IC | 1 | |
| IC6131 | C0ZBZ0000895 | IC | 1 | |
| IC6151 | C0ZBZ0001324 | IC | 1 | |
| IC6191 | C0ZBZ0000895 | IC | 1 | |
| IC6211 | C0ZBZ0001325 | IC | 1 | |
| IC6221 | C0DBEMC00043 | IC | 1 | |
| IC6241 | C0JBAZ000005 | IC | 1 | |
| IC6251 | NJM2903M | INTEGRATED CIRCUIT | 1 | |
| IC6471 | C0DBEKA00003 | IC | 1 | |
| IC6472 | C0JBAA000377 | IC | 1 | |

| Ref. No. | Part No. | Part Name & Description | Pcs | Remarks |
|---|---|---|---|---|
| IC6501 | C0ZBZ0000895 | IC | 1 | |
| IC6521 | C0ZBZ0001324 | IC | 1 | |
| IC6561,62 | C0JBAZ000005 | IC | 2 | |
| IC6581 | NJM2903M | INTEGRATED CIRCUIT | 1 | |
| IC6671 | C0ZBZ0001325 | IC | 1 | |
| IC6721,22 | C0JBAZ000994 | IC | 2 | |
| IC6724,25 | C0CBADC00072 | IC | 2 | |
| IC6752 | C0ZBZ0001324 | IC | 1 | |
| IC6771 | C0CBADC00072 | IC | 1 | |
| IC6772 | C0ZBZ0001325 | IC | 1 | |
| IC6773,74 | C0JBAA000377 | IC | 2 | |
| IC6791 | N0BF1FB00001 | IC | 1 | |
| IC6801,02 | C0DBEMC00043 | IC | 2 | |
| IC6803 | C5HABZZ00165 | IC | 1 | |
| IC6821 | C0DBEMC00043 | IC | 1 | |
| IC6841 | C0DBEMC00043 | IC | 1 | |
| IC6861 | NJM2903M | INTEGRATED CIRCUIT | 1 | |
| IC6871 | NJM2903M | INTEGRATED CIRCUIT | 1 | |
| IC6901-06 | AN16077A-VT | IC | 6 | |
| IC6951-56 | AN16077A-VT | IC | 6 | |
| IC7101,02 | C0JBAZ001120 | IC | 2 | |
| IC7201,02 | C0JBAZ001120 | IC | 2 | |
| IC7204 | C0JBAZ001120 | IC | 1 | |
| IC8001 | MN2WS0039A | IC | 1 | |
| IC8002,03 | C3ABSG000039 | IC | 2 | |
| IC8004 | C0ZBZ0001030 | IC | 1 | |
| IC8302 | MN88435 | IC | 1 | PAVCA |
| IC8502 | TVRP390S | IC | 1 | PAVCA |
| IC8503 | TVRP393S | IC | 1 | PAVCA |
| IC9001 | TVRP207-2 | IC | 1 | |
| IC9002 | C1ZBZ0003577 | IC | 1 | |
| IC9003 | MNZSFC9GPH2 | IC | 1 | |
| IC9007 | TVRP210-2 | IC | 1 | |
| IC9011 | C0EBF0000431 | IC | 1 | |
| IC9013 | C0JBAZ002060 | IC | 1 | |
| IC9200 | C1ZBZ0003600 | IC | 1 | |
| IC9303 | TVRP213-2 | IC | 1 | |
| IC9500 | C1ZBZ0003575 | IC | 1 | |
| IC9802,03 | C0JBAZ001120 | IC | 2 | |
| IC9805 | C0DBAYY00274 | IC | 1 | |
| IC9806 | C0DBAYY00273 | IC | 1 | |
| IC9900 | MN84524 | IC | 1 | |
| IC9901 | C3ABQJ000051 | IC | 1 | |
| | | | | |
| JK3000 | K1U939A00003 | TERMINAL BOARD | 1 | PAVCA |
| JK3002 | K2HA204A0041 | JACK | 1 | |
| JK3701B | K4AK13B00002 | TERMINAL BOARD | 1 | PAVCA |
| JK4500,01 | K1FY119D0002 | CONNECTOR | 2 | |
| JK7701 | K1NA09E00088 | 9P CONNECTOR | 1 | PAVCA |
| | | | | |
| JS2042 | D0YAR0000007 | M 0.0 OHM, J,0.063W | 1 | |
| JS2088 | ERJ6GEY0R00V | M 0 OHM, 1/10W | 1 | |
| JS2301-05 | ERJ6GEY0R00V | M 0 OHM, 1/10W | 5 | |
| JS3051-56 | ERJ6GEY0R00V | M 0 OHM, 1/10W | 6 | |
| JS3058 | ERJ6GEY0R00V | M 0 OHM, 1/10W | 1 | |
| JS3251-53 | D0YAR0000007 | M 0.0 OHM, J,0.063W | 3 | |
| JS4010 | ERJ6GEY0R00V | M 0 OHM, 1/10W | 1 | |
| JS4020 | J0JCC0000100 | CHIP INDUCTOR | 1 | |
| JS4025 | D0YAR0000007 | M 0.0 OHM, J,0.063W | 1 | |
| JS4501 | D0YAR0000007 | M 0.0 OHM, J,0.063W | 1 | |
| JS7701 | J0JCC0000100 | CHIP INDUCTOR | 1 | |
| | | | | |
| K1 | K1KA07BA0061 | 7P CONNECTOR | 1 | |
| K2 | K1KA02BA0061 | 2P CONNECTOR | 1 | |
| | | | | |
| L1100 | J0JHC0000078 | CHIP INDUCTOR | 1 | |
| L2021 | J0JHC0000078 | CHIP INDUCTOR | 1 | |

| Ref. No. | Part No. | Part Name & Description | Pcs | Remarks |
|---|---|---|---|---|
| L2029 | J0JCC0000077 | CHIP INDUCTOR | 1 | |
| L2040 | J0JHC0000045 | CHIP INDUCTOR | 1 | |
| L2300 | G1C100M00044 | INDUCTION COIL | 1 | |
| L2302 | G1C100M00044 | INDUCTION COIL | 1 | |
| L2304 | G1C100M00044 | INDUCTION COIL | 1 | |
| L2306 | G1C100M00044 | INDUCTION COIL | 1 | |
| L2308 | J0JJC0000011 | CHIP INDUCTOR | 1 | |
| L2310 | J0JJC0000011 | CHIP INDUCTOR | 1 | |
| L3001 | J0JHC0000078 | CHIP INDUCTOR | 1 | |
| L3101 | J0JHC0000078 | CHIP INDUCTOR | 1 | |
| L3500 | TALL08N2R7MA | INDUCTION COIL | 1 | |
| L3501,02 | G1C150MA0234 | INDUCTION COIL | 2 | |
| L3506 | G1C100M00044 | INDUCTION COIL | 1 | |
| L3507 | TALL08N2R7MA | INDUCTION COIL | 1 | |
| L3511 | G1C3R3ZA0083 | INDUCTION COIL | 1 | |
| L4500-07 | J0JHC0000078 | CHIP INDUCTOR | 8 | |
| L4511 | J0JHC0000078 | CHIP INDUCTOR | 1 | |
| L4512 | J0JCC0000077 | CHIP INDUCTOR | 1 | |
| L4515,16 | J0JHC0000078 | CHIP INDUCTOR | 2 | |
| L4518 | J0JHC0000078 | CHIP INDUCTOR | 1 | |
| L4520,21 | J0JHC0000078 | CHIP INDUCTOR | 2 | |
| L4524 | J0JHC0000078 | CHIP INDUCTOR | 1 | |
| L5600,01 | G1C2R2ZA0083 | INDUCTION COIL | 2 | |
| L5602 | G1C3R3ZA0083 | INDUCTION COIL | 1 | |
| L5604 | G1C100MA0077 | INDUCTION COIL | 1 | |
| L5605 | J0JCC0000241 | CHIP INDUCTOR | 1 | |
| L5606 | G1C100MA0077 | INDUCTION COIL | 1 | |
| L5608,09 | J0JHC0000078 | CHIP INDUCTOR | 2 | |
| L5610 | G0A2R7ZA0021 | CHOKE COIL | 1 | |
| L5611 | G1C100MA0072 | INDUCTION COIL | 1 | |
| L5612 | G1C470MA0077 | INDUCTION COIL | 1 | |
| L6000 | J0JJC0000015 | CHIP INDUCTOR | 1 | |
| L6001-03 | ELC13P1R9 | CHOKE COIL | 3 | |
| L6010 | J0JJC0000015 | CHIP INDUCTOR | 1 | |
| L6011-13 | ELC13P1R9 | CHOKE COIL | 3 | |
| L6045-48 | G0ZZ00002183 | PEAKING COIL | 4 | |
| L6057,58 | G0ZZ00002183 | PEAKING COIL | 2 | |
| L6061-64 | G0ZZ00002183 | PEAKING COIL | 4 | |
| L6083,84 | G0ZZ00002183 | PEAKING COIL | 2 | |
| L6101 | J0JJC0000015 | CHIP INDUCTOR | 1 | |
| L6103 | G0ZZ00002183 | PEAKING COIL | 1 | |
| L6106 | J0JJC0000015 | CHIP INDUCTOR | 1 | |
| L6212 | J0JJC0000015 | CHIP INDUCTOR | 1 | |
| L6221 | G0ZZ00002183 | PEAKING COIL | 1 | |
| L6241 | G0ZZ00002183 | PEAKING COIL | 1 | |
| L6262 | G0ZZ00002183 | PEAKING COIL | 1 | |
| L6271 | G0ZZ00002183 | PEAKING COIL | 1 | |
| L6401-03 | ELC13P1R9 | CHOKE COIL | 3 | |
| L6411-13 | ELC13P1R9 | CHOKE COIL | 3 | |
| L6461-68 | G0ZZ00002183 | PEAKING COIL | 8 | |
| L6472 | G0ZZ00002183 | PEAKING COIL | 1 | |
| L6474 | G0ZZ00002183 | PEAKING COIL | 1 | |
| L6481,82 | G0ZZ00002183 | PEAKING COIL | 2 | |
| L6485,86 | G0ZZ00002183 | PEAKING COIL | 2 | |
| L6591,92 | G0ZZ00002183 | PEAKING COIL | 2 | |
| L6601,02 | G0ZZ00002183 | PEAKING COIL | 2 | |
| L6690 | G0ZZ00002183 | PEAKING COIL | 1 | |
| L7701 | J0JCC0000143 | CHIP INDUCTOR | 1 | PAVCA |
| L8001-05 | J0JHC0000045 | CHIP INDUCTOR | 5 | |
| L8006 | J0JCC0000100 | CHIP INDUCTOR | 1 | |
| L8007-10 | J0JHC0000045 | CHIP INDUCTOR | 4 | |
| L8300-03 | J0JHC0000045 | CHIP INDUCTOR | 4 | |
| L8306,07 | G1CR22JA0020 | INDUCTION COIL | 2 | |
| L8309 | G1CR39JA0020 | INDUCTION COIL | 1 | PAVCA |
| L8310,11 | J0JHC0000045 | CHIP INDUCTOR | 2 | |
| L8313,14 | J0JHC0000045 | CHIP INDUCTOR | 2 | |
| L8317,18 | G1CR39JA0020 | INDUCTION COIL | 2 | PAVCA |
| L8500 | J0JCC0000241 | CHIP INDUCTOR | 1 | |
| L8501 | J0JHC0000045 | CHIP INDUCTOR | 1 | |
| L8507 | J0JHC0000045 | CHIP INDUCTOR | 1 | |
| L9500 | G1C150KA0038 | INDUCTION COIL | 1 | |
| L9501,02 | J0JHC0000078 | CHIP INDUCTOR | 2 | |
| L9504,05 | J0JHC0000078 | CHIP INDUCTOR | 2 | |

| Ref. No. | Part No. | Part Name & Description | Pcs | Remarks |
|---|---|---|---|---|
| L9800 | G1C2R2Z00007 | INDUCTION COIL | 1 | |
| L9801 | G1C1R5Z00006 | INDUCTION COIL | 1 | |
| L9802 | G1C2R2Z00007 | INDUCTION COIL | 1 | |
| | | | | |
| NP | TNPH0692AES | CIRCUIT BOARD A | 1 | PAVCA ⚠ |
| NP | TXNC11HNTU | CIRCUIT BOARD C1 | 1 | PAVCA ⚠ |
| NP | TXNC21HNTU | CIRCUIT BOARD C2 | 1 | PAVCA ⚠ |
| NP | TZTNP01LPTU | CIRCUIT BOARD D | 1 | PAVCA ⚠ |
| NP | TXN/P1HNTUS | CIRCUIT BOARD P | 1 | PAVCA ⚠ |
| NP | TXNSC1HNTU | CIRCUIT BOARD SC | 1 | PAVCA ⚠ |
| NP | TXNSD1HNTU | CIRCUIT BOARD SD | 1 | PAVCA ⚠ |
| NP | TXNSS1HNTUJS | CIRCUIT BOARD SS | 1 | PAVCA ⚠ |
| NP | TXNSU1HNTU | CIRCUIT BOARD SU | 1 | PAVCA ⚠ |
| NP | TNPA4307S | CIRCUIT BOARD K | 1 | PAVCA ⚠ |
| NP | TNPA4237S | CIRCUIT BOARD S | 1 | PAVCA ⚠ |
| NP | TNPA4306S | CIRCUIT BOARD G | 1 | PAVCA ⚠ |
| NP | TNPA4308S | CIRCUIT BOARD GS | 1 | PAVCA ⚠ |
| | | | | |
| PA9800 | K5H4022A0023 | FUSE | 1 | |
| PA9900 | K5H5022A0023 | FUSE | 1 | |
| | | | | |
| PC6480 | B3PBA0000223 | IC | 1 | |
| PC6701,02 | B3PBA0000457 | IC | 2 | |
| PC6704 | B3PBA0000456 | IC | 1 | |
| PC6705 | B3PBA0000397 | IC | 1 | |
| PC6801 | B3PBA0000223 | IC | 1 | |
| PC6861 | B3PBA0000223 | IC | 1 | |
| PC6871 | B3PBA0000223 | IC | 1 | |
| | | | | |
| Q1107,08 | 2SD0601ARL | TRANSISTOR | 2 | |
| Q2041,42 | 2SD0601ARL | TRANSISTOR | 2 | |
| Q2053 | 2SB0709ARL | TRANSISTOR | 1 | |
| Q2056 | 2SD0601ARL | TRANSISTOR | 1 | |
| Q2057 | 2SB0709ARL | TRANSISTOR | 1 | |
| Q2059,60 | 2SD0601ARL | TRANSISTOR | 2 | |
| Q2066 | 2SD0601ARL | TRANSISTOR | 1 | |
| Q2301 | 2SB0709ARL | TRANSISTOR | 1 | |
| Q2302 | 2SD0601ARL | TRANSISTOR | 1 | |
| Q2510,11 | 2SD0601ARL | TRANSISTOR | 2 | |
| Q2602 | B1MBACA00008 | TRANSISTOR | 1 | |
| Q3123,24 | 2SD0601ARL | TRANSISTOR | 2 | |
| Q3125 | 2SB0709ARL | TRANSISTOR | 1 | |
| Q3500 | 2SD0601ARL | TRANSISTOR | 1 | |
| Q3502,03 | 2SB0709ARL | TRANSISTOR | 2 | |
| Q3504,05 | 2SD0601ARL | TRANSISTOR | 2 | |
| Q4010-15 | 2SD0601ARL | TRANSISTOR | 6 | |
| Q4500-05 | 2SD0601ARL | TRANSISTOR | 6 | |
| Q4514-17 | 2SB0709ARL | TRANSISTOR | 4 | |
| Q5021 | 2SB0709ARL | TRANSISTOR | 1 | |
| Q5600-02 | B1MBEDA00015 | TRANSISTOR | 3 | |
| Q5604 | 2SB0709ARL | TRANSISTOR | 1 | |
| Q5605 | 2SK3065T100 | FET | 1 | |
| Q5606,07 | 2SD0601ARL | TRANSISTOR | 2 | |
| Q6001-03 | B1JADN000001 | TRANSISTOR | 3 | |
| Q6021-23 | B1JADN000001 | TRANSISTOR | 3 | |
| Q6031 | B1ADRD000001 | TRANSISTOR | 1 | |
| Q6041,42 | B1JADN000002 | TRANSISTOR | 2 | |
| Q6052 | B1JADN000002 | TRANSISTOR | 1 | |
| Q6101 | B1DFKM000002 | TRANSISTOR | 1 | |
| Q6103 | B1ABNF000006 | TRANSISTOR | 1 | |
| Q6104 | B1ADNF000006 | TRANSISTOR | 1 | |
| Q6106 | B1DFKM000002 | TRANSISTOR | 1 | |
| Q6111 | B1DFKM000001 | TRANSISTOR | 1 | |
| Q6114 | B1DFKM000001 | TRANSISTOR | 1 | |
| Q6141 | B1ABNF000006 | TRANSISTOR | 1 | |
| Q6142 | B1ADNF000006 | TRANSISTOR | 1 | |
| Q6146 | B1ABNF000006 | TRANSISTOR | 1 | |
| Q6147 | B1ADNF000006 | TRANSISTOR | 1 | |
| Q6171 | B1ABRD000003 | TRANSISTOR | 1 | |
| Q6172 | B1ADRD000001 | TRANSISTOR | 1 | |
| Q6181 | B1ABRD000003 | TRANSISTOR | 1 | |
| Q6222 | 2SC1473AQA | TRANSISTOR | 1 | PAVCA |
| Q6251 | 2SD0601ARL | TRANSISTOR | 1 | |

| Ref. No. | Part No. | Part Name & Description | Pcs | Remarks |
|---|---|---|---|---|
| Q6256 | 2SD1263A | TRANSISTOR | 1 | |
| Q6271 | 2SD0601ARL | TRANSISTOR | 1 | |
| Q6401-03 | B1JADN000001 | TRANSISTOR | 3 | |
| Q6421-23 | B1JADP000002 | TRANSISTOR | 3 | |
| Q6441,42 | B1JADN000002 | TRANSISTOR | 2 | |
| Q6451 | B1JADP000002 | TRANSISTOR | 1 | |
| Q6501 | B1ABNF000006 | TRANSISTOR | 1 | |
| Q6502 | B1ADNF000006 | TRANSISTOR | 1 | |
| Q6521 | B1ABNF000006 | TRANSISTOR | 1 | |
| Q6522 | B1ADNF000006 | TRANSISTOR | 1 | |
| Q6531 | B1ABRD000003 | TRANSISTOR | 1 | |
| Q6532 | B1ADRD000001 | TRANSISTOR | 1 | |
| Q6551 | B1ABRD000003 | TRANSISTOR | 1 | |
| Q6552 | B1ADRD000001 | TRANSISTOR | 1 | |
| Q6581 | 2SD0601ARL | TRANSISTOR | 1 | |
| Q6601 | B1DFES000003 | TRANSISTOR | 1 | |
| Q6602 | 2SD0601ARL | TRANSISTOR | 1 | |
| Q6603 | 2SB0709ARL | TRANSISTOR | 1 | |
| Q6621,22 | 2SK399500L | FET | 2 | |
| Q6642-44 | 2SK399500L | FET | 3 | |
| Q6646-48 | 2SK399500L | FET | 3 | |
| Q6661 | B1DEET000002 | TRANSISTOR | 1 | |
| Q6662 | 2SD0601ARL | TRANSISTOR | 1 | |
| Q6665 | B1ABNF000006 | TRANSISTOR | 1 | |
| Q6671,72 | B1DFDR000001 | TRANSISTOR | 2 | |
| Q6679 | B1ABNF000006 | TRANSISTOR | 1 | |
| Q6680 | B1ADNF000006 | TRANSISTOR | 1 | |
| Q6690 | 2SA19610Q0HW | TRANSISTOR | 1 | |
| Q6742,43 | 2SD0601ARL | TRANSISTOR | 2 | |
| Q6762 | B1ADNF000006 | TRANSISTOR | 1 | |
| Q6781 | B1ABNF000006 | TRANSISTOR | 1 | |
| Q6782 | B1ADNF000006 | TRANSISTOR | 1 | |
| Q6791 | 2SD0601ARL | TRANSISTOR | 1 | |
| Q6805 | 2SC3063 | TRANSISTOR | 1 | |
| Q6806 | 2SC1473AEA | TRANSISTOR | 1 | PAVCA |
| Q6821,22 | 2SD1263A | TRANSISTOR | 2 | |
| Q6824 | 2SD0601ARL | TRANSISTOR | 1 | |
| Q6841 | 2SD1263A | TRANSISTOR | 1 | |
| Q6842 | 2SC1473AEA | TRANSISTOR | 1 | PAVCA |
| Q8301 | 2SB0709ARL | TRANSISTOR | 1 | |
| Q8302,03 | B1CBHD000002 | FET | 2 | |
| Q9010 | 2SD0601ARL | TRANSISTOR | 1 | |
| Q9044 | 2SD0601ARL | TRANSISTOR | 1 | |
| Q9046 | 2SD0601ARL | TRANSISTOR | 1 | |
| Q9050-54 | 2SD0601ARL | TRANSISTOR | 5 | |
| Q9301,02 | 2SD0601ARL | TRANSISTOR | 2 | |
| Q9805,06 | 2SD0601ARL | TRANSISTOR | 2 | |
| Q9807-09 | B1MBEDA00015 | TRANSISTOR | 3 | |
| | | | | |
| R1104 | ERJ2GEJ473 | M 47KOHM, J,0.063W | 1 | |
| R1110 | ERJ2GEJ103 | M 10KOHM, J,0.063W | 1 | |
| R1111,12 | ERJ2GEJ474 | M 470KOHM, J,0.063W | 2 | |
| R1113 | ERJ2GEJ101 | M 100 OHM, J,0.063W | 1 | |
| R1124,25 | ERJ2GEJ473 | M 47KOHM, J,0.063W | 2 | |
| R1126 | ERJ2GEJ101 | M 100 OHM, J,0.063W | 1 | |
| R1134 | ERJ2GEJ473 | M 47KOHM, J,0.063W | 1 | |
| R1137 | ERJ2GEJ473 | M 47KOHM, J,0.063W | 1 | |
| R1139,40 | ERJ2GEJ473 | M 47KOHM, J,0.063W | 2 | |
| R1143,44 | ERJ2GEJ473 | M 47KOHM, J,0.063W | 2 | |
| R1146 | ERJ2GEJ102X | M 1KOHM, J,0.063W | 1 | |
| R1147 | ERJ2GEJ105 | M 1MOHM, J,0.063W | 1 | |
| R1148 | ERJ2GEJ101 | M 100 OHM, J,0.063W | 1 | |

| Ref. No. | Part No. | Part Name & Description | Pcs | Remarks |
|---|---|---|---|---|
| R1151,52 | ERJ2GEJ473 | M 47KOHM, J,0.063W | 2 | |
| R1153 | ERJ2GEJ821 | M 820 OHM, J,0.063W | 1 | |
| R1162 | ERJ2GEJ101 | M 100 OHM, J,0.063W | 1 | |
| R1164 | ERJ2GEJ103 | M 10KOHM, J,0.063W | 1 | |
| R1165 | ERJ2GEJ182 | M 1.8KOHM, J,0.063W | 1 | |
| R1166 | ERJ2GEJ104 | M 100KOHM, J,0.063W | 1 | |
| R1167 | ERJ2GED563X | M 56KOHM ,J,0.063W | 1 | |
| R1168 | ERJ2GEJ333 | M 33KOHM, J,0.063W | 1 | |
| R1169 | ERJ2GED563X | M 56KOHM ,J,0.063W | 1 | |
| R1170 | ERJ2GEJ273 | M 27KOHM ,J,0.063W | 1 | |
| R1171 | ERJ2GED563X | M 56KOHM ,J,0.063W | 1 | |
| R1172 | ERJ2GEJ273 | M 27KOHM ,J,0.063W | 1 | |
| R1173 | ERJ2GEJ473 | M 47KOHM, J,0.063W | 1 | |
| R1174,75 | ERJ2GEJ220 | M 22 OHM, J,0.063W | 2 | |
| R1179 | ERJ2GEJ101 | M 100 OHM, J,0.063W | 1 | |
| R1181 | ERJ2GEJ101 | M 100 OHM, J,0.063W | 1 | |
| R1182 | ERJ2GEJ273 | M 27KOHM ,J,0.063W | 1 | |
| R1183,84 | ERJ2GEJ220 | M 22 OHM, J,0.063W | 2 | |
| R1187 | ERJ2GEJ473 | M 47KOHM, J,0.063W | 1 | |
| R1190,91 | ERJ2GEJ473 | M 47KOHM, J,0.063W | 2 | |
| R1194 | ERJ2GED563X | M 56KOHM ,J,0.063W | 1 | |
| R1195 | ERJ2GEJ104 | M 100KOHM, J,0.063W | 1 | |
| R1196 | ERJ2GEJ333 | M 33KOHM, J,0.063W | 1 | |
| R1199 | ERJ2GEJ473 | M 47KOHM, J,0.063W | 1 | |
| R1200,01 | ERJ2GEJ562 | M 5.6KOHM, J,0.063W | 2 | |
| R1203 | ERJ2GEJ473 | M 47KOHM, J,0.063W | 1 | |
| R1204 | D0YAR0000007 | M 0.0 OHM, J,0.063W | 1 | |
| R1205,06 | ERJ2GEJ220 | M 22 OHM, J,0.063W | 2 | |
| R1209 | ERJ2GEJ473 | M 47KOHM, J,0.063W | 1 | |
| R1216 | ERJ2GEJ333 | M 33KOHM, J,0.063W | 1 | |
| R1217 | ERJ2GED563X | M 56KOHM ,J,0.063W | 1 | |
| R1218-20 | ERJ2GEJ103 | M 10KOHM, J,0.063W | 3 | |
| R1221 | ERJ3EKF7151 | M 7.15KOHM, 1/16W | 1 | |
| R1222 | ERJ2GEJ473 | M 47KOHM, J,0.063W | 1 | |
| R1223 | ERJ2GEJ103 | M 10KOHM, J,0.063W | 1 | |
| R1224 | ERJ2GEJ473 | M 47KOHM, J,0.063W | 1 | |
| R1225 | ERJ2GEJ103 | M 10KOHM, J,0.063W | 1 | |
| R1226-28 | ERJ2GEJ473 | M 47KOHM, J,0.063W | 3 | |
| R1229 | ERJ2GEJ101 | M 100 OHM, J,0.063W | 1 | |
| R1230-37 | ERJ2GEJ473 | M 47KOHM, J,0.063W | 8 | |

| Ref. No. | Part No. | Part Name & Description | Pcs | Remarks |
|---|---|---|---|---|
| R1242-47 | ERJ2GEJ473 | M 47KOHM, J,0.063W | 6 | |
| R1250-56 | ERJ2GEJ473 | M 47KOHM, J,0.063W | 7 | |
| R1260 | ERJ2GEJ473 | M 47KOHM, J,0.063W | 1 | |
| R1262 | ERJ2GEJ101 | M 100 OHM, J,0.063W | 1 | |
| R1263 | ERJ2GEJ473 | M 47KOHM, J,0.063W | 1 | |
| R1264 | D0YAR0000007 | M 0.0 OHM, J,0.063W | 1 | |
| R1267-71 | ERJ2GEJ473 | M 47KOHM, J,0.063W | 5 | |
| R1273 | ERJ2GEJ473 | M 47KOHM, J,0.063W | 1 | |
| R1343 | ERJ2GEJ561 | M 60 OHM, J,0.063W | 1 | |
| R1344,45 | ERJ2GEJ473 | M 47KOHM, J,0.063W | 2 | |
| R1356 | ERJ2GEJ101 | M 100 OHM, J,0.063W | 1 | |
| R2056,57 | ERJ2GEJ220 | M 22 OHM, J,0.063W | 2 | |
| R2058 | D0YAR0000007 | M 0.0 OHM, J,0.063W | 1 | |
| R2059 | ERJ2GEJ105 | M 1MOHM, J,0.063W | 1 | |
| R2100 | ERJ3EKF2002 | M 20KOHM, 1/16W | 1 | |
| R2102 | ERJ2GEJ562 | M 5.6KOHM, J,0.063W | 1 | |
| R2104 | ERJ3EKF2001 | M 2KOHM, 1/16W | 1 | |
| R2106 | ERJ2GEJ103 | M 10KOHM, J,0.063W | 1 | |
| R2107,08 | ERJ2GEJ102X | M 1KOHM, J,0.063W | 2 | |
| R2110 | ERJ2GEJ103 | M 10KOHM, J,0.063W | 1 | |
| R2111 | ERJ2GEJ101 | M 100 OHM, J,0.063W | 1 | |
| R2112 | ERJ2GEJ104 | M 100KOHM, J,0.063W | 1 | |
| R2113 | ERJ3EKF1203 | M 120KOHM, 1/16W | 1 | |
| R2114 | ERJ3EKF7502 | M 75KOHM, 1/16W | 1 | |
| R2115 | ERJ2GEJ103 | M 10KOHM, J,0.063W | 1 | |
| R2116 | ERJ2GEJ102X | M 1KOHM, J,0.063W | 1 | |
| R2117 | ERJ2GEJ473 | M 47KOHM, J,0.063W | 1 | |
| R2118 | ERJ2GEJ223 | M 22KOHM, J,0.063W | 1 | |
| R2125 | ERJ2GEJ102X | M 1KOHM, J,0.063W | 1 | |
| R2130,31 | ERJ2GEJ103 | M 10KOHM, J,0.063W | 2 | |
| R2132 | ERJ2GEJ104 | M 100KOHM, J,0.063W | 1 | |
| R2139 | ERJ2GEJ103 | M 10KOHM, J,0.063W | 1 | |
| R2140 | ERJ2GEJ104 | M 100KOHM, J,0.063W | 1 | |
| R2142 | ERJ2GEJ223 | M 22KOHM, J,0.063W | 1 | |
| R2145 | ERJ2GEJ104 | M 100KOHM, J,0.063W | 1 | |
| R2146 | ERJ2GEJ105 | M 1MOHM, J,0.063W | 1 | |
| R2148 | D0YAR0000007 | M 0.0 OHM, J,0.063W | 1 | |
| R2149 | ERJ2GEJ103 | M 10KOHM, J,0.063W | 1 | |
| R2150,51 | ERJ3EKF2802 | M 28KOHM, 1/16W | 2 | |
| R2153 | ERJ2GEJ104 | M 100KOHM, J,0.063W | 1 | |
| R2165 | ERJ2GEJ103 | M 10KOHM, J,0.063W | 1 | |
| R2166 | ERJ3EKF1602 | M16.0KOHM, 1/16W | 1 | |
| R2168 | ERJ3EKF1602 | M16.0KOHM, 1/16W | 1 | |
| R2169 | ERJ3EKF2202 | M 22KOHM, 1/16W | 1 | |

| Ref. No. | Part No. | Part Name & Description | Pcs | Remarks |
|---|---|---|---|---|
| R2181 | ERJ3EKF2202 | M 22KOHM, 1/16W | 1 | |
| R2182,83 | ERJ3EKF3602 | M 36KOHM, 1/16W | 2 | |
| R2199 | J0JCC0000100 | CHIP INDUCTOR | 1 | |
| R2271 | EXB28VR000X | RESISTOR ARRAY | 1 | |
| R2276 | ERJ2GEJ103 | M 10KOHM, J,0.063W | 1 | |
| R2301,02 | ERJ2GEJ222 | M 2.2KOHM, J,0.063W | 2 | |
| R2305 | ERJ3GEYJ471 | M 470 OHM,J,1/16W | 1 | |
| R2306 | ERJ3GEYJ683 | M 68KOHM,J,1/16W | 1 | |
| R2308 | ERJ8GEYJ3R3V | M 3.3 OHM, J,1/8W | 1 | |
| R2311 | ERJ8GEYJ3R3V | M 3.3 OHM, J,1/8W | 1 | |
| R2313 | ERJ8GEYJ3R3V | M 3.3 OHM, J,1/8W | 1 | |
| R2315 | ERJ8GEYJ3R3V | M 3.3 OHM, J,1/8W | 1 | |
| R2317 | ERJ6GEYJ100V | M 10 OHM,J,1/10W | 1 | |
| R2319 | ERJ6GEYJ100V | M 10 OHM,J,1/10W | 1 | |
| R2321 | ERJ6GEYJ100V | M 10 OHM,J,1/10W | 1 | |
| R2325 | ERJ6GEYJ100V | M 10 OHM,J,1/10W | 1 | |
| R2330 | ERJ2GEJ102X | M 1KOHM, J,0.063W | 1 | |
| R2331 | ERJ2GEJ222 | M 2.2KOHM, J,0.063W | 1 | |
| R2350 | ERJ2GEJ224 | M 220KOHM, J,0.063W | 1 | |
| R2351 | ERJ2GEJ103 | M 10KOHM, J,0.063W | 1 | |
| R2352 | ERJ2GEJ473 | M 47KOHM, J,0.063W | 1 | |
| R2353 | ERJ2GEJ104 | M 100KOHM, J,0.063W | 1 | |
| R2362 | ERJ6GEYJ100V | M 10 OHM,J,1/10W | 1 | |
| R2516 | ERJ3GEYJ223 | M 22KOHM,J,1/16W | 1 | |
| R2517 | ERJ6GEYG470V | M 47 OHM,J,1/10W | 1 | |
| R2520 | ERJ3GEYJ224 | M 220KOHM,J,1/16W | 1 | |
| R2524 | ERJ3GEYJ223 | M 22KOHM,J,1/16W | 1 | |
| R2525 | ERJ3GEYF821 | M 820 OHM, 1/16W | 1 | |
| R2542 | D0GB473JA057 | M 47KOHM,J,1/16W | 1 | |
| R2557 | ERJ3GEYJ562 | M 5.6KOHM,J,1/16W | 1 | |
| R2620,21 | ERJ2GEJ220 | M 22 OHM, J,0.063W | 2 | |
| R2622,23 | ERJ2GEJ472 | M 4.7KOHM, J,0.063W | 2 | |
| R3001 | ERJ2GEJ221 | M 220 OHM, J,0.063W | 1 | |
| R3002 | ERJ2GEJ102X | M 1KOHM, J,0.063W | 1 | |
| R3003 | ERJ2GEJ221 | M 220 OHM, J,0.063W | 1 | |
| R3005 | ERJ2GEJ221 | M 220 OHM, J,0.063W | 1 | |
| R3014 | ERJ2GEJ221 | M 220 OHM, J,0.063W | 1 | |
| R3015 | ERJ2GEJ102X | M 1KOHM, J,0.063W | 1 | |
| R3016 | ERJ2GEJ221 | M 220 OHM, J,0.063W | 1 | |
| R3018 | ERJ2GEJ221 | M 220 OHM, J,0.063W | 1 | |
| R3020 | ERJ2GEJ221 | M 220 OHM, J,0.063W | 1 | |
| R3021-23 | ERJ3EKF75R0 | M 0.75HM, 1/16W | 3 | |
| R3032 | ERJ2GEJ221 | M 220 OHM, J,0.063W | 1 | |
| R3033 | ERJ3EKF75R0 | M 0.75HM, 1/16W | 1 | |
| R3051-53 | D0YAR0000007 | M 0.0 OHM, J,0.063W | 3 | |
| R3071 | ERJ2GEJ680 | M 68 OHM, J,0.063W | 1 | |
| R3073 | ERJ2GEJ680 | M 68 OHM, J,0.063W | 1 | |
| R3075 | ERJ2GEJ680 | M 68 OHM, J,0.063W | 1 | |

| Ref. No. | Part No. | Part Name & Description | Pcs | Remarks |
|---|---|---|---|---|
| R3077 | ERJ2GEJ680 | M 68 OHM, J,0.063W | 1 | |
| R3079 | ERJ2GEJ680 | M 68 OHM, J,0.063W | 1 | |
| R3081 | ERJ2GEJ680 | M 68 OHM, J,0.063W | 1 | |
| R3083 | ERJ2GEJ331 | M 330 OHM, J,0.063W | 1 | |
| R3084 | ERJ2GEJ220 | M 22 OHM, J,0.063W | 1 | |
| R3087 | ERJ2GEJ221 | M 220 OHM, J,0.063W | 1 | |
| R3095 | ERJ2GEJ221 | M 220 OHM, J,0.063W | 1 | |
| R3096 | ERJ2GEJ102X | M 1KOHM, J,0.063W | 1 | |
| R3097 | ERJ2GEJ221 | M 220 OHM, J,0.063W | 1 | |
| R3099 | ERJ2GEJ221 | M 220 OHM, J,0.063W | 1 | |
| R3103,04 | ERJ2GEJ221 | M 220 OHM, J,0.063W | 2 | |
| R3106-17 | ERJ2GEJ221 | M 220 OHM, J,0.063W | 12 | |
| R3120,21 | ERJ2GEJ221 | M 220 OHM, J,0.063W | 2 | |
| R3122 | ERJ2GEJ104 | M 100KOHM, J,0.063W | 1 | |
| R3123,24 | ERJ2GEJ182 | M 1.8KOHM, J,0.063W | 2 | |
| R3125,26 | ERJ2GEJ221 | M 220 OHM, J,0.063W | 2 | |
| R3134 | ERJ2GEJ104 | M 100KOHM, J,0.063W | 1 | |
| R3135,36 | ERJ2GEJ220 | M 22 OHM, J,0.063W | 2 | |
| R3137 | ERJ2GEJ104 | M 100KOHM, J,0.063W | 1 | |
| R3145 | ERJ2GEJ101 | M 100 OHM, J,0.063W | 1 | |
| R3146 | ERJ2GEJ184 | M 180KOHM, J,0.063W | 1 | |
| R3147 | ERJ2GEJ101 | M 100 OHM, J,0.063W | 1 | |
| R3148 | ERJ2GEJ184 | M 180KOHM, J,0.063W | 1 | |
| R3149,50 | ERJ2GEJ101 | M 100 OHM, J,0.063W | 2 | |
| R3151 | ERJ2GEJ105 | M 1MOHM, J,0.063W | 1 | |
| R3152 | ERJ2GEJ473 | M 47KOHM, J,0.063W | 1 | |
| R3153 | ERJ2GEJ102X | M 1KOHM, J,0.063W | 1 | |
| R3154 | ERJ2GEJ274 | M 270KOHM, J,0.063W | 1 | |
| R3189 | ERJ3EKF75R0 | M 0.75HM, 1/16W | 1 | |
| R3190-93 | D0GB393JA041 | M 39KOHM,J,1/16W | 4 | |
| R3194 | ERJ3EKF75R0 | M 0.75HM, 1/16W | 1 | |
| R3195,96 | D0GB393JA041 | M 39KOHM,J,1/16W | 2 | |
| R3197-99 | ERJ3EKF75R0 | M 0.75HM, 1/16W | 3 | |
| R3200-02 | D0GB393JA041 | M 39KOHM,J,1/16W | 3 | |
| R3203 | ERJ3EKF75R0 | M 0.75HM, 1/16W | 1 | |
| R3204 | D0GB393JA041 | M 39KOHM,J,1/16W | 1 | |
| R3205 | ERJ3EKF75R0 | M 0.75HM, 1/16W | 1 | |
| R3207-09 | ERJ3EKF75R0 | M 0.75HM, 1/16W | 3 | |
| R3211,12 | ERJ3EKF75R0 | M 0.75HM, 1/16W | 2 | |
| R3258-60 | ERJ2GEJ470 | M 47 OHM, J,0.063W | 3 | |
| R3261 | ERJ3EKF1000 | M 100 OHM, 1/16W | 1 | |
| R3505,06 | ERJ2GEJ103 | M 10KOHM, J,0.063W | 2 | |
| R3507 | ERJ2GEJ473 | M 47KOHM, J,0.063W | 1 | |
| R3508 | D0YAR0000007 | M 0.0 OHM, J,0.063W | 1 | |
| R3512 | ERJ2GEJ222 | M 2.2KOHM, J,0.063W | 1 | |

| Ref. No. | Part No. | Part Name & Description | Pcs | Remarks |
|---|---|---|---|---|
| R3513 | ERJ2GEJ472 | M 4.7KOHM, J,0.063W | 1 | |
| R3514 | ERJ2GEJ103 | M 10KOHM, J,0.063W | 1 | |
| R3515 | ERJ2GEJ473 | M 47KOHM, J,0.063W | 1 | |
| R3516 | ERJ2GEJ222 | M 2.2KOHM, J,0.063W | 1 | |
| R3517 | ERJ2GEJ472 | M 4.7KOHM, J,0.063W | 1 | |
| R3518 | ERJ3GEYJ681 | M 680 OHM,J,1/16W | 1 | |
| R3519 | ERJ2GEJ222 | M 2.2KOHM, J,0.063W | 1 | |
| R3520 | ERJ2GEJ104 | M 100KOHM, J,0.063W | 1 | |
| R3521 | ERJ3GEYJ471 | M 470 OHM,J,1/16W | 1 | |
| R3523 | ERJ3GEYJ471 | M 470 OHM,J,1/16W | 1 | |
| R3525 | ERJ3GEYJ221 | M 220 OHM,J,1/16W | 1 | |
| R3527,28 | ERJ2GEJ103 | M 10KOHM, J,0.063W | 2 | |
| R3529,30 | ERJ2GEJ472 | M 4.7KOHM, J,0.063W | 2 | |
| R3534 | ERJ3EKF2611 | M2.61KOHM, 1/16W | 1 | |
| R3535 | ERJ3EKF1271V | M1.27KOHM, 1/16W | 1 | PAVCA |
| R3560,61 | ERJ8GEY0R00 | M 0 OHM, 1/8W | 2 | |
| R3572,73 | ERJ8GEY0R00 | M 0 OHM, 1/8W | 2 | |
| R3716,17 | ERJ6ENF3902 | M 39KOHM,J,1/10W | 2 | |
| R3721 | ERJ6GEYG103 | M 10KOHM,J,1/10W | 1 | |
| R3732 | J0JCC0000100 | CHIP INDUCTOR | 1 | |
| R3752 | ERJ6ENF1741 | M1.74KOHM, 1/10W | 1 | |
| R3753 | ERJ6ENF1621 | M1.62KOHM, 1/10W | 1 | |
| R3754 | ERJ6ENF2321 | M2.32KOHM, 1/10W | 1 | |
| R3756 | ERJ6GEY0R00V | M 0 OHM, 1/10W | 1 | |
| R3758 | ERJ6ENF3161 | M3.16KOHM, 1/10W | 1 | |
| R3766,67 | ERJ6GEY0R00V | M 0 OHM, 1/10W | 2 | |
| R4001 | ERJ2GEJ103 | M 10KOHM, J,0.063W | 1 | |
| R4013 | ERJ2GEJ473 | M 47KOHM, J,0.063W | 1 | |
| R4079 | D1HG5608A002 | NETWORK RESISTER | 1 | |
| R4081 | D1HG5608A002 | NETWORK RESISTER | 1 | |
| R4089-91 | D1HG5608A002 | NETWORK RESISTER | 3 | |
| R4092,93 | ERJ6GEY0R00V | M 0 OHM, 1/10W | 2 | |
| R4134-37 | ERJ2GEJ101 | M 100 OHM, J,0.063W | 4 | |
| R4141 | ERJ2GEJ152 | M 1.5KOHM, J,0.063W | 1 | |
| R4142 | ERJ2GEJ473 | M 47KOHM, J,0.063W | 1 | |
| R4143 | ERJ2GEJ152 | M 1.5KOHM, J,0.063W | 1 | |
| R4145 | ERJ2GEJ562 | M 5.6KOHM, J,0.063W | 1 | |
| R4146 | ERJ2GEJ104 | M 100KOHM, J,0.063W | 1 | |
| R4147 | ERJ2GEJ223 | M 22KOHM, J,0.063W | 1 | |
| R4148-50 | ERJ2GEJ473 | M 47KOHM, J,0.063W | 3 | |
| R4151 | J0JCC0000100 | CHIP INDUCTOR | 1 | |
| R4153,54 | ERJ2GEJ101 | M 100 OHM, J,0.063W | 2 | |
| R4156 | ERJ2GEJ220 | M 22 OHM, J,0.063W | 1 | |
| R4162 | ERJ2GEJ104 | M 100KOHM, J,0.063W | 1 | |
| R4166 | ERJ2GEJ103 | M 10KOHM, J,0.063W | 1 | |
| R4167 | ERJ2GEJ473 | M 47KOHM, J,0.063W | 1 | |
| R4168 | EXB2HV473JV | RESISTOR ARRAY | 1 | |
| R4286-88 | ERJ2GEJ473 | M 47KOHM, J,0.063W | 3 | |
| R4325 | ERJ2GEJ473 | M 47KOHM, J,0.063W | 1 | |

| Ref. No. | Part No. | Part Name & Description | Pcs | Remarks |
|---|---|---|---|---|
| R4328 | ERJ2GEJ473 | M 47KOHM, J,0.063W | 1 | |
| R4330 | ERJ2GEJ473 | M 47KOHM, J,0.063W | 1 | |
| R4500,01 | ERJ2GEJ103 | M 10KOHM, J,0.063W | 2 | |
| R4502,03 | ERJ2GEJ390 | M 39 OHM, J,0.063W | 2 | |
| R4506,07 | ERJ2GEJ103 | M 10KOHM, J,0.063W | 2 | |
| R4508-23 | ERJ2GEJ2R2X | M 2.2OHM, J,0.063W | 16 | |
| R4524,25 | ERJ2GEJ103 | M 10KOHM, J,0.063W | 2 | |
| R4526,27 | ERJ2GEJ102X | M 1KOHM, J,0.063W | 2 | |
| R4528 | ERJ2GEJ103 | M 10KOHM, J,0.063W | 1 | |
| R4529 | ERJ2GEJ472 | M 4.7KOHM, J,0.063W | 1 | |
| R4530 | ERJ2GEJ103 | M 10KOHM, J,0.063W | 1 | |
| R4531 | ERJ2GEJ472 | M 4.7KOHM, J,0.063W | 1 | |
| R4532,33 | ERJ2GEJ103 | M 10KOHM, J,0.063W | 2 | |
| R4535,36 | ERJ2GEJ472 | M 4.7KOHM, J,0.063W | 2 | |
| R4538 | ERJ2GEJ473 | M 47KOHM, J,0.063W | 1 | |
| R4539 | ERJ2GEJ680 | M 68 OHM, J,0.063W | 1 | |
| R4540 | ERJ2GEJ473 | M 47KOHM, J,0.063W | 1 | |
| R4541-43 | ERJ2GEJ680 | M 68 OHM, J,0.063W | 3 | |
| R4544-47 | ERJ2GEJ103 | M 10KOHM, J,0.063W | 4 | |
| R4552 | ERJ2GEJ220 | M 22 OHM, J,0.063W | 1 | |
| R4561-63 | ERJ2GEJ472 | M 4.7KOHM, J,0.063W | 3 | |
| R4564,65 | ERJ2GEJ220 | M 22 OHM, J,0.063W | 2 | |
| R4578,79 | ERJ2GEJ151 | M 150 OHM, J,0.063W | 2 | |
| R4585 | ERJ2GEJ101 | M 100 OHM, J,0.063W | 1 | |
| R4587 | ERJ3GEYF821 | M 820 OHM, 1/16W | 1 | |
| R4590,91 | D0YAR0000007 | M 0.0 OHM, J,0.063W | 2 | |
| R4593 | ERJ3EKF1001 | M 1KOHM, 1/16W | 1 | |
| R4596-98 | ERJ6GEYG102 | M 1KOHM,J,1/10W | 3 | |
| R4601 | ERJ6GEYG102 | M 1KOHM,J,1/10W | 1 | |
| R4604 | ERJ3EKF7501 | M 7.5KOHM, 1/16W | 1 | |
| R4606 | ERJ3EKF4701 | M 4.7KOHM, 1/16W | 1 | |
| R4611 | ERJ3EKF1371 | M 1.37KOHM, 1/16W | 1 | |
| R4612 | ERJ3EKF1501 | M 1.5KOHM, 1/16W | 1 | |
| R4613,14 | ERJ2GEJ220 | M 22 OHM, J,0.063W | 2 | |
| R4615 | ERJ3EKF1600 | M 160 OHM, 1/16W | 1 | |
| R4617 | ERJ2GEJ102X | M 1KOHM, J,0.063W | 1 | |
| R4619 | ERJ2GEJ102X | M 1KOHM, J,0.063W | 1 | |
| R4620 | D0YAR0000007 | M 0.0 OHM, J,0.063W | 1 | |
| R4622 | ERJ2GEJ101 | M 100 OHM, J,0.063W | 1 | |
| R4624 | ERJ3EKF1691 | M1.69KOHM, 1/16W | 1 | |
| R4626 | ERJ2GEJ105 | M 1MOHM, J,0.063W | 1 | |
| R4627 | D0YAR0000007 | M 0.0 OHM, J,0.063W | 1 | |
| R4630 | ERJ2GEJ472 | M 4.7KOHM, J,0.063W | 1 | |
| R4631 | ERJ3EKF4990 | M 499 OHM, 1/16W | 1 | |
| R4632 | ERJ2GEJ472 | M 4.7KOHM, J,0.063W | 1 | |

| Ref. No. | Part No. | Part Name & Description | Pcs | Remarks |
|---|---|---|---|---|
| R4635 | EXB28V680JX | RESISTOR ARRAY | 1 | |
| R4636-38 | ERJ2GEJ680 | M 68 OHM, J,0.063W | 3 | |
| R4639,40 | EXB28V680JX | RESISTOR ARRAY | 2 | |
| R4641 | ERJ2GEJ220 | M 22 OHM, J,0.063W | 1 | |
| R4642 | EXB28V680JX | RESISTOR ARRAY | 1 | |
| R4643,44 | ERJ2GEJ220 | M 22 OHM, J,0.063W | 2 | |
| R4645-47 | ERJ2GEJ680 | M 68 OHM, J,0.063W | 3 | |
| R4648 | EXB28V330J | RESISTOR ARRAY | 1 | |
| R4649 | EXB28V680JX | RESISTOR ARRAY | 1 | |
| R4650,51 | ERJ2GEJ680 | M 68 OHM, J,0.063W | 2 | |
| R4652 | ERJ2GEJ473 | M 47KOHM, J,0.063W | 1 | |
| R4653 | ERJ2GEJ472 | M 4.7KOHM, J,0.063W | 1 | |
| R4654 | D0YAR0000007 | M 0.0 OHM, J,0.063W | 1 | |
| R4656-58 | ERJ2GEJ220 | M 22 OHM, J,0.063W | 3 | |
| R4661 | ERJ2GEJ101 | M 100 OHM, J,0.063W | 1 | |
| R4663,64 | D0YAR0000007 | M 0.0 OHM, J,0.063W | 2 | |
| R4666 | ERJ2GEJ473 | M 47KOHM, J,0.063W | 1 | |
| R4667 | ERJ2GEJ151 | M 150 OHM, J,0.063W | 1 | |
| R4670 | ERJ2GEJ680 | M 68 OHM, J,0.063W | 1 | |
| R4671,72 | D0YAR0000007 | M 0.0 OHM, J,0.063W | 2 | |
| R4691,92 | ERJ2GEJ220 | M 22 OHM, J,0.063W | 2 | |
| R4746 | ERJ2GEJ473 | M 47KOHM, J,0.063W | 1 | |
| R4754-62 | J0JCC0000100 | CHIP INDUCTOR | 9 | |
| R4766-89 | J0JCC0000100 | CHIP INDUCTOR | 24 | |
| R4790 | ERJ2GEJ472 | M 4.7KOHM, J,0.063W | 1 | |
| R4819,20 | ERJ2GEJ220 | M 22 OHM, J,0.063W | 2 | |
| R4860,61 | ERJ2GEJ102X | M 1KOHM, J,0.063W | 2 | |
| R4864 | ERJ2GEJ102X | M 1KOHM, J,0.063W | 1 | |
| R5058 | ERJ2GEJ102X | M 1KOHM, J,0.063W | 1 | |
| R5069 | ERJ2GEJ103 | M 10KOHM, J,0.063W | 1 | |
| R5137 | ERJ2GEJ102X | M 1KOHM, J,0.063W | 1 | |
| R5182 | ERJ2GEJ223 | M 22KOHM, J,0.063W | 1 | |
| R5183 | ERJ2GEJ221 | M 220 OHM, J,0.063W | 1 | |
| R5184 | ERJ2GEJ222 | M 2.2KOHM, J,0.063W | 1 | |
| R5185 | ERJ2GEJ221 | M 220 OHM, J,0.063W | 1 | |
| R5186 | ERJ2RHD682X | M 22KOHM, J, 2W | 1 | |
| R5188 | ERJ2RHD682X | M 22KOHM, J, 2W | 1 | |
| R5600 | ERJ2GEJ680 | M 68 OHM, J,0.063W | 1 | |
| R5601 | J0JCC0000100 | CHIP INDUCTOR | 1 | |
| R5602,03 | D0YAR0000007 | M 0.0 OHM, J,0.063W | 2 | |
| R5604 | ERJ3GEYF473 | M 47KOHM, 1/16W | 1 | |
| R5605 | ERJ3EKF1272 | M12.7KOHM, 1/16W | 1 | |
| R5606-09 | D0YAR0000007 | M 0.0 OHM, J,0.063W | 4 | |
| R5610 | ERJ2GEJ104 | M 100KOHM, J,0.063W | 1 | |
| R5611 | ERJ3GEYF473 | M 47KOHM, 1/16W | 1 | |
| R5612 | ERJ3EKF1602 | M16.0KOHM, 1/16W | 1 | |
| R5614 | J0JCC0000100 | CHIP INDUCTOR | 1 | |

| Ref. No. | Part No. | Part Name & Description | Pcs | Remarks |
|---|---|---|---|---|
| R5616 | D0YAR0000007 | M 0.0 OHM, J,0.063W | 1 | |
| R5620 | ERJ2GEJ680 | M 68 OHM, J,0.063W | 1 | |
| R5621 | ERJ3EKF2702V | M27.0KOHM, 1/16W | 1 | |
| R5622 | ERJ2GEJ104 | M 100KOHM, J,0.063W | 1 | |
| R5623 | ERJ3GEYF473 | M 47KOHM, 1/16W | 1 | |
| R5625-28 | D0YAR0000007 | M 0.0 OHM, J,0.063W | 4 | |
| R5629 | ERJ3EKF2802 | M 28KOHM, 1/16W | 1 | |
| R5630 | ERJ3EKF4752 | M47.5KOHM, 1/16W | 1 | |
| R5631 | ERJ3EKF3602 | M 36KOHM, 1/16W | 1 | |
| R5632 | ERJ3EKF3002 | M 30KOHM, 1/16W | 1 | |
| R5633 | ERJ3EKF3602 | M 36KOHM, 1/16W | 1 | |
| R5634 | ERJ3EKF1602 | M16.0KOHM, 1/16W | 1 | |
| R5635 | ERJ2GEJ223 | M 22KOHM, J,0.063W | 1 | |
| R5636 | ERJ2GEJ683 | M 68KOHM, J,0.063W | 1 | |
| R5637 | D0YAR0000007 | M 0.0 OHM, J,0.063W | 1 | |
| R5638 | ERJ2GEJ102X | M 1KOHM, J,0.063W | 1 | |
| R5640 | ERJ2GEJ473 | M 47KOHM, J,0.063W | 1 | |
| R5647 | D0YAR0000007 | M 0.0 OHM, J,0.063W | 1 | |
| R5648 | ERJ2GEJ103 | M 10KOHM, J,0.063W | 1 | |
| R5650,51 | ERJ2GED563X | M 56KOHM ,J,0.063W | 2 | |
| R5652 | ERJ2GEJ104 | M 100KOHM, J,0.063W | 1 | |
| R5653 | ERJ3EKF8202 | M 82KOHM, 1/16W | 1 | |
| R5654 | ERJ3EKF1622V | M16.2KOHM, 1/16W | 1 | PAVCA |
| R5657 | ERJ2GEJ222 | M 2.2KOHM, J,0.063W | 1 | |
| R5658 | ERJ2GEJ473 | M 47KOHM, J,0.063W | 1 | |
| R5659,60 | ERJ2GEJ103 | M 10KOHM, J,0.063W | 2 | |
| R5661 | ERJ2GEJ473 | M 47KOHM, J,0.063W | 1 | |
| R5747 | ERJ2GEJ562 | M 5.6KOHM, J,0.063W | 1 | |
| R5748,49 | ERJ2GEJ473 | M 47KOHM, J,0.063W | 2 | |
| R5762 | ERJ2GEJ101 | M 100 OHM, J,0.063W | 1 | |
| R6001 | D0GF7R5JA047 | M 7.5 OHM,J, 0.33W | 1 | |
| R6003 | D0GF7R5JA047 | M 7.5 OHM,J, 0.33W | 1 | |
| R6005 | D0GF7R5JA047 | M 7.5 OHM,J, 0.33W | 1 | |
| R6020 | ERF5TJ330 | W 33 OHM, 5W | 1 | |
| R6021 | D0GF7R5JA047 | M 7.5 OHM,J, 0.33W | 1 | |
| R6024 | D0GF7R5JA047 | M 7.5 OHM,J, 0.33W | 1 | |
| R6026 | D0GF7R5JA047 | M 7.5 OHM,J, 0.33W | 1 | |
| R6031,32 | ERJ6ENF8202 | M 82KOHM, 1/10W | 2 | |
| R6033 | ERJ6ENF5602 | M 56KOHM, 1/10W | 1 | |
| R6034 | ERJ6ENF2702 | M 27KOHM, 1/10W | 1 | |
| R6041 | D0GF5R6JA047 | M 5.6 OHM,J, 0.33W | 1 | |
| R6043 | D0GF5R6JA047 | M 5.6 OHM,J, 0.33W | 1 | |
| R6053 | D0GF5R6JA047 | M 5.6 OHM,J, 0.33W | 1 | |
| R6062 | ERJ6GEY0R00V | M 0 OHM, 1/10W | 1 | |
| R6064 | ERJ6GEY0R00V | M 0 OHM, 1/10W | 1 | |
| R6066 | ERJ6GEY0R00V | M 0 OHM, 1/10W | 1 | |
| R6068 | ERJ6GEY0R00V | M 0 OHM, 1/10W | 1 | |
| R6070-73 | ERJ6GEY0R00V | M 0 OHM, 1/10W | 4 | |
| R6102 | D0GD221JA059 | M 220 OHM,J,1/10W | 1 | |

| Ref. No. | Part No. | Part Name & Description | Pcs | Remarks |
|---|---|---|---|---|
| R6108 | D0GD221JA059 | M 220 OHM,J,1/10W | 1 | |
| R6109 | D0GD100JA059 | M 10 OHM,J,0.25W | 1 | |
| R6110 | ERJ6GEYF473 | M 47KOHM,J,1/10W | 1 | |
| R6111 | D0GD470JA059 | M 47 OHM,J,0.25W | 1 | |
| R6113 | ERJ14YJ224 | M 220KOHM, J,1/4W | 1 | |
| R6114 | D0GD470JA059 | M 47 OHM,J,0.25W | 1 | |
| R6116 | ERJ6GEYF473 | M 47KOHM,J,1/10W | 1 | |
| R6131,32 | ERJ6GEYJ101V | M 100 OHM,J,1/10W | 2 | |
| R6134 | D0GD750JA059 | M 75 OHM,J,0.25W | 1 | |
| R6135,36 | D0GD100JA059 | M 10 OHM,J,0.25W | 2 | |
| R6141,42 | ERJ6GEYF473 | M 47KOHM,J,1/10W | 2 | |
| R6145 | D0GF1R0JA047 | M 1.0 OHM,J, 0.33W | 1 | |
| R6146,47 | ERJ6GEYF473 | M 47KOHM,J,1/10W | 2 | |
| R6151,52 | ERJ6GEYJ101V | M 100 OHM,J,1/10W | 2 | |
| R6154 | D0GD750JA059 | M 75 OHM,J,0.25W | 1 | |
| R6157-60 | D0GF1R0JA047 | M 1.0 OHM,J, 0.33W | 4 | |
| R6171 | D0GD100JA059 | M 10 OHM,J,0.25W | 1 | |
| R6172,73 | ERJ6GEYF473 | M 47KOHM,J,1/10W | 2 | |
| R6181 | D0GD100JA059 | M 10 OHM,J,0.25W | 1 | |
| R6182,83 | ERJ6GEYF473 | M 47KOHM,J,1/10W | 2 | |
| R6191,92 | ERJ6GEYJ101V | M 100 OHM,J,1/10W | 2 | |
| R6193 | D0GD750JA059 | M 75 OHM,J,0.25W | 1 | |
| R6194 | D0GF1R0JA047 | M 1.0 OHM,J, 0.33W | 1 | |
| R6210 | ERJ6GEYG222 | M 2.2KOHM,J,1/10W | 1 | |
| R6213 | ERJ6GEYJ101V | M 100 OHM,J,1/10W | 1 | |
| R6214 | D0GD151JA059 | M 150 OHM,J,0.25W | 1 | |
| R6220 | ERJ6GEYG470V | M 47 OHM,J,1/10W | 1 | |
| R6221 | ERJ6GEYF472 | M 4.7KOHM,J,1/10W | 1 | |
| R6222 | ERG1FJS103D | M 10KOHM, J, 1W | 1 | |
| R6223 | ERG2FJS123D | M 12KOHM, J, 2W | 1 | |
| R6225 | D0GD203JA059 | M 20KOHM,J,1/10W | 1 | |
| R6226,27 | ERJ6GEYJ163V | M 16KOHM,J,1/10W | 2 | |
| R6228 | ERJ6GEYG562 | M 5.6KOHM,J,1/10W | 1 | |
| R6229 | ERJ6GEYJ163V | M 16KOHM,J,1/10W | 1 | |
| R6230 | ERJ6GEYG470V | M 47 OHM,J,1/10W | 1 | |
| R6231 | ERJ6GEYF472 | M 4.7KOHM,J,1/10W | 1 | |
| R6232 | ERJ6ENF1201 | M 1.2KOHM, 1/10W | 1 | |
| R6241 | EXB38V470J | RESISTOR ARRAY | 1 | |
| R6242 | EXB38V472JV | RESISTOR ARRAY | 1 | |
| R6246 | ERJ6GEYJ273 | M 27KOHM,J,1/10W | 1 | |
| R6247 | D0GF154JA047 | M 150 KOHM,J,0.33W | 1 | |
| R6248 | ERJ6GEYJ273 | M 27KOHM,J,1/10W | 1 | |
| R6249 | D0GF154JA047 | M 150 KOHM,J,0.33W | 1 | |
| R6252,53 | ERJ6ENF3902 | M 39KOHM, 1/10W | 2 | |
| R6254 | ERJ6ENF8201 | M 8.2KOHM, 1/10W | 1 | |
| R6255 | ERJ6ENF1201 | M 1.2KOHM, 1/10W | 1 | |
| R6256 | ERJ6ENF1501 | M 1.5KOHM, 1/10W | 1 | |
| R6257 | ERJ6GEYG103 | M 10KOHM,J,1/10W | 1 | |
| R6258 | ERJ6GEYG222 | M 2.2KOHM,J,1/10W | 1 | |
| R6261 | ERJ6GEYG104 | M 100KOHM,J,1/10W | 1 | |
| R6269 | ERJ6GEYJ273 | M 27KOHM,J,1/10W | 1 | |
| R6270 | D0GF154JA047 | M 150 KOHM,J,0.33W | 1 | |
| R6272 | ERJ6GEYG222 | M 2.2KOHM,J,1/10W | 1 | |
| R6273 | ERJ6GEYG103 | M 10KOHM,J,1/10W | 1 | |
| R6274 | ERJ6GEYG221 | M 220 OHM,J,1/10W | 1 | |
| R6276 | ERJ6GEYG823 | M 82KOHM,J,1/10W | 1 | |

| Ref. No. | Part No. | Part Name & Description | Pcs | Remarks |
|---|---|---|---|---|
| R6278 | ERJ6GEYJ273 | M 27KOHM,J,1/10W | 1 | |
| R6279 | D0GF154JA047 | M 150 KOHM,J,0.33W | 1 | |
| R6284 | ERJ6GEYG102 | M 1KOHM,J,1/10W | 1 | |
| R6292 | ERJ6GEYF473 | M 47KOHM,J,1/10W | 1 | |
| R6401-03 | D0GF7R5JA047 | M 7.5 OHM,J, 0.33W | 3 | |
| R6421-23 | D0GF5R6JA047 | M 5.6 OHM,J, 0.33W | 3 | |
| R6441,42 | D0GF5R6JA047 | M 5.6 OHM,J, 0.33W | 2 | |
| R6451 | D0GF5R6JA047 | M 5.6 OHM,J, 0.33W | 1 | |
| R6465 | ERJ6ENF2702 | M 27KOHM, 1/10W | 1 | |
| R6466 | ERJ6ENF5602 | M 56KOHM, 1/10W | 1 | |
| R6467,68 | ERJ6ENF8202 | M 82KOHM, 1/10W | 2 | |
| R6471 | ERJ6GEYG392 | M 3.9KOHM,J,1/10W | 1 | |
| R6472 | ERJ6GEYG222 | M 2.2KOHM,J,1/10W | 1 | |
| R6473 | ERJ6GEYF561 | M 560 OHM,J,1/10W | 1 | |
| R6474 | ERJ6GEYG102 | M 1KOHM,J,1/10W | 1 | |
| R6475,76 | ERJ6GEYF472 | M 4.7KOHM,J,1/10W | 2 | |
| R6477 | ERJ6GEYJ101V | M 100 OHM,J,1/10W | 1 | |
| R6501,02 | ERJ6GEYJ101V | M 100 OHM,J,1/10W | 2 | |
| R6503 | D0GD100JA059 | M 10 OHM,J,0.25W | 1 | |
| R6504 | D0GD750JA059 | M 75 OHM,J,0.25W | 1 | |
| R6506 | D0GD100JA059 | M 10 OHM,J,0.25W | 1 | |
| R6507-10 | D0GF1R0JA047 | M 1.0 OHM,J, 0.33W | 4 | |
| R6511,12 | ERJ6GEYF473 | M 47KOHM,J,1/10W | 2 | |
| R6516,17 | ERJ6GEYF473 | M 47KOHM,J,1/10W | 2 | |
| R6521,22 | ERJ6GEYJ101V | M 100 OHM,J,1/10W | 2 | |
| R6523 | D0GD750JA059 | M 75 OHM,J,0.25W | 1 | |
| R6531 | D0GD100JA059 | M 10 OHM,J,0.25W | 1 | |
| R6532,33 | ERJ6GEYF473 | M 47KOHM,J,1/10W | 2 | |
| R6551 | D0GD100JA059 | M 10 OHM,J,0.25W | 1 | |
| R6552,53 | ERJ6GEYF473 | M 47KOHM,J,1/10W | 2 | |
| R6561-64 | EXB38V470J | RESISTOR ARRAY | 4 | |
| R6565-68 | EXB38V472JV | RESISTOR ARRAY | 4 | |
| R6580 | ERJ6GEYG222 | M 2.2KOHM,J,1/10W | 1 | |
| R6582,83 | ERJ6ENF3902 | M 39KOHM, 1/10W | 2 | |
| R6584 | ERJ6ENF8201 | M 8.2KOHM, 1/10W | 1 | |
| R6585 | ERJ6ENF1801 | M 1.8KOHM, 1/10W | 1 | |
| R6586 | ERJ6ENF1201 | M 1.2KOHM, 1/10W | 1 | |
| R6587 | ERJ6GEYG222 | M 2.2KOHM,J,1/10W | 1 | |
| R6588 | ERJ6GEYG103 | M 10KOHM,J,1/10W | 1 | |
| R6590 | ERJ6GEYG221 | M 220 OHM,J,1/10W | 1 | |
| R6591 | EXB38V472JV | RESISTOR ARRAY | 1 | |
| R6592 | ERJ6GEYF472 | M 4.7KOHM,J,1/10W | 1 | |
| R6605 | ERJ6GEYG182 | M 1.8KOHM,J,1/10W | 1 | |
| R6607 | ERJ6ENF6811 | M6.81KOHM, 1/10W | 1 | |
| R6608,09 | D0GF102JA047 | M 1.0 KOHM,J,0.33W | 2 | |
| R6610 | ERJ6GEYG104 | M 100KOHM,J,1/10W | 1 | |
| R6612 | D0GD470JA059 | M 47 OHM,J,0.25W | 1 | |
| R6621,22 | ERJ6GEYG221 | M 220 OHM,J,1/10W | 2 | |
| R6623 | ERG2FJS333D | M 33KOHM, J, 2W | 1 | |
| R6638,39 | D0GF1R0JA047 | M 1.0 OHM,J, 0.33W | 2 | |
| R6642-44 | D0GD330JA059 | M 33 OHM,J,1/10W | 3 | |
| R6646-48 | D0GD330JA059 | M 33 OHM,J,1/10W | 3 | |
| R6658 | D0D1101JA009 | M 100 OHM,J,1W | 1 | |
| R6659,60 | ERJ6GEYJ224 | M 220KOHM,J,1/10W | 2 | |

| Ref. No. | Part No. | Part Name & Description | Pcs | Remarks |
|---|---|---|---|---|
| R6661 | ERJ6GEYG104 | M 100KOHM,J,1/10W | 1 | |
| R6662 | ERJ6ENF2201 | M 2.2KOHM, 1/10W | 1 | |
| R6663 | ERJ6GEYG103 | M 10KOHM,J,1/10W | 1 | |
| R6664 | D0GF222JA047 | M 2.2 KOHM,J,0.33W | 1 | |
| R6665 | D0GD470JA059 | M 47 OHM,J,0.25W | 1 | |
| R6666 | ERJ6GEYG104 | M 100KOHM,J,1/10W | 1 | |
| R6667,68 | ERJ6GEYF472 | M 4.7KOHM,J,1/10W | 2 | |
| R6671 | D0GD470JA059 | M 47 OHM,J,0.25W | 1 | |
| R6672 | ERJ6GEYF473 | M 47KOHM,J,1/10W | 1 | |
| R6673,74 | D0GD470JA059 | M 47 OHM,J,0.25W | 2 | |
| R6680,81 | D0GD100JA059 | M 10 OHM,J,0.25W | 2 | |
| R6692 | D0GZ472JA020 | M 4.7KOHM,J, 0.5W | 1 | |
| R6693 | ERJ6GEYG823 | M 82KOHM,J,1/10W | 1 | |
| R6694 | ERJ6GEYJ273 | M 27KOHM,J,1/10W | 1 | |
| R6695 | ERJ8GEYJ124 | M 120KOHM, J,1/8W | 1 | |
| R6696 | ERF5TK2R2 | W 2.2 OHM, K, 5W | 1 | |
| R6700-04 | ERJ6GEYJ471 | M 470 OHM,J,1/10W | 5 | |
| R6705,06 | ERJ6GEYJ101V | M 100 OHM,J,1/10W | 2 | |
| R6707,08 | ERJ6GEYJ471 | M 470 OHM,J,1/10W | 2 | |
| R6709 | ERJ6GEYJ101V | M 100 OHM,J,1/10W | 1 | |
| R6710-14 | ERJ6GEYG222 | M 2.2KOHM,J,1/10W | 5 | |
| R6717,18 | ERJ6GEYG222 | M 2.2KOHM,J,1/10W | 2 | |
| R6721,22 | EXB38V220JV | RESISTOR ARRAY | 2 | |
| R6723 | ERJ6GEYG182 | M 1.8KOHM,J,1/10W | 1 | |
| R6724 | ERJ6GEYJ101V | M 100 OHM,J,1/10W | 1 | |
| R6742 | ERJ6GEYG103 | M 10KOHM,J,1/10W | 1 | |
| R6745 | ERJ6GEYF472 | M 4.7KOHM,J,1/10W | 1 | |
| R6746,47 | D0GD103JA059 | M 10KOHM,J,0.25W | 2 | |
| R6748 | ERJ6GEYG332 | M 3.3KOHM,J,1/10W | 1 | |
| R6761 | D0GD100JA059 | M 10 OHM,J,0.25W | 1 | |
| R6762 | ERJ6GEYF473 | M 47KOHM,J,1/10W | 1 | |
| R6765 | D0GF1R0JA047 | M 1.0 OHM,J, 0.33W | 1 | |
| R6766 | D0GD750JA059 | M 75 OHM,J,0.25W | 1 | |
| R6768 | D0GF1R0JA047 | M 1.0 OHM,J, 0.33W | 1 | |
| R6769 | D0GD750JA059 | M 75 OHM,J,0.25W | 1 | |
| R6775,76 | ERJ6GEYJ101V | M 100 OHM,J,1/10W | 2 | |
| R6777 | D0GD151JA059 | M 150 OHM,J,0.25W | 1 | |
| R6781 | D0GD470JA059 | M 47 OHM,J,0.25W | 1 | |
| R6782 | ERJ6GEYF473 | M 47KOHM,J,1/10W | 1 | |
| R6788 | ERJ6GEYJ474 | M 470KOHM,J,1/10W | 1 | |
| R6789 | ERJ6GEYF473 | M 47KOHM,J,1/10W | 1 | |
| R6791 | ERJ6GEYG102 | M 1KOHM,J,1/10W | 1 | |
| R6792 | ERJ6GEYG103 | M 10KOHM,J,1/10W | 1 | |
| R6793 | ERJ6GEYJ101V | M 100 OHM,J,1/10W | 1 | |
| R6795,96 | ERJ6GEYG104 | M 100KOHM,J,1/10W | 2 | |
| R6797 | ERJ6ENF1692 | M16.9KOHM, 1/10W | 1 | |
| R6801 | ERG2FNJS8R2E | M 8.2 OHM, J, 2W | 1 | |
| R6802 | ERJ6GEYG103 | M 10KOHM,J,1/10W | 1 | |
| R6806,07 | ERX12SJ1R5 | M 1.5 OHM, J,1/2W | 2 | |
| R6808 | D0GF272JA047 | M 2.7 KOHM,J,0.33W | 1 | |
| R6809 | ERG1SJ273 | M 27KOHM, J, 1W | 1 | |
| R6810 | ERJ6GEYG102 | M 1KOHM,J,1/10W | 1 | |
| R6811 | ERJ6GEYG103 | M 10KOHM,J,1/10W | 1 | |

| Ref. No. | Part No. | Part Name & Description | Pcs | Remarks |
|---|---|---|---|---|
| R6812 | ERJ6ENF2403 | M 240KOHM, 1/10W | 1 | |
| R6813 | ERJ6ENF1002 | M 10KOHM, 1/10W | 1 | |
| R6814 | ERJ6ENF5601 | M 5.6KOHM, 1/10W | 1 | |
| R6815 | ERJ6ENF2700 | M 270 OHM, 1/10W | 1 | |
| R6816 | ERJ6ENF1152 | M11.5KOHM, 1/10W | 1 | |
| R6817 | ERJ6ENF2491 | M2.49KOHM, 1/10W | 1 | |
| R6818 | ERJ6GEYJ474 | M 470KOHM,J,1/10W | 1 | |
| R6821 | ERF5TJ221 | W 220 OHM, J, 5W | 1 | |
| R6822 | ERJ12YJ104U | M 100KOHM, 1/2W | 1 | |
| R6823 | ERG1FJS104D | M 100KOHM, J, 1W | 1 | |
| R6824 | ERJ6GEYG392 | M 3.9KOHM,J,1/10W | 1 | |
| R6825-27 | ERJ6ENF2003 | M 200KOHM, 1/10W | 3 | |
| R6828 | ERJ6ENF4701 | M 4.7KOHM, 1/10W | 1 | |
| R6829,30 | ERJ6GEYG104 | M 100KOHM,J,1/10W | 2 | |
| R6831 | ERJ6GEYG153 | M 15KOHM,J,1/10W | 1 | |
| R6832 | D0GF4R7JA047 | M 4.7 OHM,J, 0.33W | 1 | |
| R6833-36 | ERJ6ENF7502 | M 75KOHM, 1/10W | 4 | |
| R6837 | ERJ6ENF5602 | M 56KOHM, 1/10W | 1 | |
| R6839 | ERJ6GEYF472 | M 4.7KOHM,J,1/10W | 1 | |
| R6840 | ERX12SJ1R5 | M 1.5 OHM, J,1/2W | 1 | |
| R6841 | ERJ12YJ153U | M 15KOHM, 1/2W | 1 | |
| R6842 | ERJ12YJ433U | M 43KOHM, 1/2W | 1 | |
| R6843 | ERJ6GEYJ623 | M 62KOHM,J,1/10W | 1 | |
| R6844 | D0D2101JA021 | M 100 OHM,J,2W | 1 | |
| R6845-47 | ERJ6GEYJ623 | M 62KOHM,J,1/10W | 3 | |
| R6848 | ERJ6GEYG103 | M 10KOHM,J,1/10W | 1 | |
| R6849,50 | ERJ6ENF6802 | M 68KOHM, 1/10W | 2 | |
| R6851 | ERJ6ENF1802 | M 18KOHM, 1/10W | 1 | |
| R6852 | ERJ6ENF2701 | M 2.7KOHM, 1/10W | 1 | |
| R6853 | ERJ6GEYJ101V | M 100 OHM,J,1/10W | 1 | |
| R6855 | ERJ12YJ103 | M 10KOHM,J, 1/2W | 1 | |
| R6856 | ERQ12AJW560E | F 56 OHM, J,1/2W | 1 | |
| R6857 | ERJ12YJ124U | M 120KOHM, 1/2W | 1 | |
| R6860 | D0D28R2JA021 | M 8.2 OHM,J,2W | 1 | |
| R6861,62 | ERJ6ENF5102 | M 51KOHM, 1/10W | 2 | |
| R6863 | ERJ6ENF5602 | M 56KOHM, 1/10W | 1 | |
| R6864 | ERJ6ENF6801 | M 6.8KOHM, 1/10W | 1 | |
| R6865 | ERJ6ENF3301 | M 3.3KOHM, 1/10W | 1 | |
| R6866 | ERJ6ENF6200 | M 620 OHM, 1/10W | 1 | |
| R6867 | ERJ6GEYG392 | M 3.9KOHM,J,1/10W | 1 | |
| R6868 | ERJ6GEYJ223 | M 22KOHM,J,1/10W | 1 | |
| R6869 | ERJ6GEYF472 | M 4.7KOHM,J,1/10W | 1 | |
| R6871-73 | ERJ6ENF3902 | M 39KOHM, 1/10W | 3 | |
| R6874 | ERJ6ENF6801 | M 6.8KOHM, 1/10W | 1 | |
| R6875 | ERJ6ENF3301 | M 3.3KOHM, 1/10W | 1 | |
| R6876 | ERJ6RBD561 | M 560 OHM, 1/10W | 1 | |
| R6877 | ERJ6GEYG392 | M 3.9KOHM,J,1/10W | 1 | |
| R6878 | ERJ6GEYJ223 | M 22KOHM,J,1/10W | 1 | |
| R6879 | ERJ6GEYF472 | M 4.7KOHM,J,1/10W | 1 | |
| R6886-88 | ERJ6GEYJ224 | M 220KOHM,J,1/10W | 3 | |
| R6891 | ERJ6GEYG183 | M 18KOHM,J,1/10W | 1 | |
| R6901 | ERJ6GEYJ101V | M 100 OHM,J,1/10W | 1 | |
| R6902-04 | ERJ3GEYJ220 | M 22 OHM,J,1/16W | 3 | |
| R6905 | ERJ6GEYG221 | M 220 OHM,J,1/10W | 1 | |
| R6909 | ERJ6GEYG221 | M 220 OHM,J,1/10W | 1 | |
| R6913 | ERJ6GEYG221 | M 220 OHM,J,1/10W | 1 | |
| R6917 | ERJ6GEYG221 | M 220 OHM,J,1/10W | 1 | |
| R6924 | ERJ6GEYG221 | M 220 OHM,J,1/10W | 1 | |

| Ref. No. | Part No. | Part Name & Description | Pcs | Remarks |
|---|---|---|---|---|
| R6925,26 | J0JCC0000100 | CHIP INDUCTOR | 2 | |
| R6931-34 | ERJ6GEYG103 | M 10KOHM,J,1/10W | 4 | |
| R6935,36 | ERJ8GEYJ224 | M 220KOHM, J,1/8W | 2 | |
| R6938 | ERJ6GEYG103 | M 10KOHM,J,1/10W | 1 | |
| R6951 | ERJ6GEYJ101V | M 100 OHM,J,1/10W | 1 | |
| R6952-54 | ERJ3GEYJ220 | M 22 OHM,J,1/16W | 3 | |
| R6955 | ERJ6GEYG221 | M 220 OHM,J,1/10W | 1 | |
| R6959 | ERJ6GEYG221 | M 220 OHM,J,1/10W | 1 | |
| R6963 | ERJ6GEYG221 | M 220 OHM,J,1/10W | 1 | |
| R6967 | ERJ6GEYG221 | M 220 OHM,J,1/10W | 1 | |
| R6971 | ERJ6GEYG221 | M 220 OHM,J,1/10W | 1 | |
| R6975,76 | J0JCC0000100 | CHIP INDUCTOR | 2 | |
| R6981-84 | ERJ6GEYG103 | M 10KOHM,J,1/10W | 4 | |
| R6985,86 | ERJ8GEYJ224 | M 220KOHM, J,1/8W | 2 | |
| R6989 | ERJ6GEYG103 | M 10KOHM,J,1/10W | 1 | |
| R7112 | D0GF472JA047 | M 4.7KOHM,J, 0.33W | 1 | |
| R7119 | EXB38V220JV | RESISTOR ARRAY | 1 | |
| R7122-25 | D0GZ6R8JA020 | M 6.8 OHM,J, 0.5W | 4 | |
| R7126 | ERJ6GEYJ224 | M 220KOHM,J,1/10W | 1 | |
| R7130-36 | EXB38V471J | RESISTOR ARRAY | 7 | |
| R7142-45 | D0GZ6R8JA020 | M 6.8 OHM,J, 0.5W | 4 | |
| R7151-54 | D0GZ6R8JA020 | M 6.8 OHM,J, 0.5W | 4 | |
| R7155 | EXB38V102J | RESISTOR ARRAY | 1 | |
| R7159 | EXB38V470J | RESISTOR ARRAY | 1 | |
| R7162 | EXB38V471J | RESISTOR ARRAY | 1 | |
| R7171-74 | D0GZ6R8JA020 | M 6.8 OHM,J, 0.5W | 4 | |
| R7177 | EXB38V102J | RESISTOR ARRAY | 1 | |
| R7180 | ERJ3GEYJ470 | M 47 OHM,J,1/16W | 1 | |
| R7184 | EXB38V220JV | RESISTOR ARRAY | 1 | |
| R7185 | D0GB102JA057 | M 1KOHM,J,1/16W | 1 | |
| R7186 | J0JCC0000100 | CHIP INDUCTOR | 1 | |
| R7212-15 | D0GZ6R8JA020 | M 6.8 OHM,J, 0.5W | 4 | |
| R7219 | ERJ6GEYJ224 | M 220KOHM,J,1/10W | 1 | |
| R7223-26 | D0GZ6R8JA020 | M 6.8 OHM,J, 0.5W | 4 | |
| R7229 | ERJ6GEY0R00V | M 0 OHM, 1/10W | 1 | |
| R7232-35 | D0GZ6R8JA020 | M 6.8 OHM,J, 0.5W | 4 | |
| R7238 | EXB38V471J | RESISTOR ARRAY | 1 | |
| R7245 | EXB38V102J | RESISTOR ARRAY | 1 | |
| R7249 | EXB38V220JV | RESISTOR ARRAY | 1 | |
| R7250 | EXB38V470J | RESISTOR ARRAY | 1 | |
| R7257 | ERJ3GEYJ470 | M 47 OHM,J,1/16W | 1 | |
| R7258 | EXB38V102J | RESISTOR ARRAY | 1 | |
| R7262-65 | D0GZ6R8JA020 | M 6.8 OHM,J, 0.5W | 4 | |
| R7269 | D0GF472JA047 | M 4.7KOHM,J, 0.33W | 1 | |
| R7273-79 | EXB38V471J | RESISTOR ARRAY | 7 | |
| R7280 | D0GB102JA057 | M 1KOHM,J,1/16W | 1 | |
| R7281 | ERJ6GEYG102 | M 1KOHM,J,1/10W | 1 | |
| R7285 | EXB38V220JV | RESISTOR ARRAY | 1 | |
| R7286 | J0JCC0000100 | CHIP INDUCTOR | 1 | |
| R7288,89 | EXB38V222J | RESISTOR ARRAY | 2 | |
| R7290,91 | EXB38V470J | RESISTOR ARRAY | 2 | |
| R7701 | ERJ2GEJ680 | M 68 OHM, J,0.063W | 1 | |
| R7702 | D0YAR0000007 | M 0.0 OHM, J,0.063W | 1 | |
| R7703-05 | ERJ2GEJ680 | M 68 OHM, J,0.063W | 3 | |
| R7708 | J0JCC0000100 | CHIP INDUCTOR | 1 | |
| R7709 | ERJ2GEJ680 | M 68 OHM, J,0.063W | 1 | |
| R7710 | ERJ2GEJ101 | M 100 OHM, J,0.063W | 1 | |
| R7713 | D0YAR0000007 | M 0.0 OHM, J,0.063W | 1 | |
| R7716 | J0JCC0000100 | CHIP INDUCTOR | 1 | |
| R7731 | J0JCC0000100 | CHIP INDUCTOR | 1 | |
| R7792-99 | J0JCC0000100 | CHIP INDUCTOR | 8 | |
| R8001 | ERJ2GEJ181 | M 180 OHM, J,0.063W | 1 | |
| R8002 | ERJ2GEJ820 | M 82 OHM, J,0.063W | 1 | |
| R8003 | J0JCC0000100 | CHIP INDUCTOR | 1 | |
| R8004 | ERJ3EKF2402 | M 24KOHM, 1/16W | 1 | |
| R8005 | ERJ3EKF1002 | M 10KOHM, 1/16W | 1 | |
| R8006 | ERJ3EKF6801 | M 6.8KOHM, 1/16W | 1 | |
| R8030 | ERJ2GEJ101 | M 100 OHM, J,0.063W | 1 | |
| R8031,32 | ERJ3EKF2700 | M 270 OHM, 1/16W | 2 | |
| R8035 | D0YAR0000007 | M 0.0 OHM, J,0.063W | 1 | |
| R8056-73 | ERJ2GEJ470 | M 47 OHM, J,0.063W | 18 | |
| R8074 | ERJ2GEJ221 | M 220 OHM, J,0.063W | 1 | |
| R8075-78 | ERJ2GEJ470 | M 47 OHM, J,0.063W | 4 | |
| R8081 | ERJ2GEJ103 | M 10KOHM, J,0.063W | 1 | |
| R8082 | D1BA75R0A026 | M0.75KOHM, 1/10W | 1 | |
| R8083 | ERJ2GEJ301 | M 300 OHM, J,0.063W | 1 | |
| R8086 | ERJ2GEJ104 | M 100KOHM, J,0.063W | 1 | |
| R8087 | ERJ2GEJ103 | M 10KOHM, J,0.063W | 1 | |
| R8090 | ERJ2GEJ103 | M 10KOHM, J,0.063W | 1 | |
| R8091 | ERJ2GEJ470 | M 47 OHM, J,0.063W | 1 | |
| R8093 | ERJ2GEJ470 | M 47 OHM, J,0.063W | 1 | |
| R8094 | ERJ2GEJ103 | M 10KOHM, J,0.063W | 1 | |
| R8097 | ERJ2GEJ221 | M 220 OHM, J,0.063W | 1 | |
| R8098,99 | ERJ2GEJ103 | M 10KOHM, J,0.063W | 2 | |
| R8100 | ERJ2GEJ470 | M 47 OHM, J,0.063W | 1 | |
| R8101 | ERJ2GEJ103 | M 10KOHM, J,0.063W | 1 | |
| R8106 | ERJ2GEJ202 | M 2KOHM, J,0.063W | 1 | |
| R8107 | ERJ2GEJ101 | M 100 OHM, J,0.063W | 1 | |
| R8111 | ERJ2GEJ103 | M 10KOHM, J,0.063W | 1 | |
| R8307,08 | ERJ2GEJ470 | M 47 OHM, J,0.063W | 2 | |
| R8309 | D0YAR0000007 | M 0.0 OHM, J,0.063W | 1 | |
| R8312 | ERJ2RHD682X | M 22KOHM, J, 2W | 1 | |
| R8313,14 | D0YAR0000007 | M 0.0 OHM, J,0.063W | 2 | |
| R8315 | ERJ2RHD682X | M 22KOHM, J, 2W | 1 | |
| R8318,19 | ERJ2GEJ101 | M 100 OHM, J,0.063W | 2 | |
| R8327,28 | ERJ2RHD682X | M 22KOHM, J, 2W | 2 | |
| R8330,31 | D0YAR0000007 | M 0.0 OHM, J,0.063W | 2 | |
| R8332 | ERJ2GEJ221 | M 220 OHM, J,0.063W | 1 | |
| R8333 | ERJ2GEJ105 | M 1MOHM, J,0.063W | 1 | |
| R8334 | D0YAR0000007 | M 0.0 OHM, J,0.063W | 1 | |

| Ref. No. | Part No. | Part Name & Description | Pcs | Remarks |
|---|---|---|---|---|
| R8335 | ERJ2GEJ221 | M 220 OHM, J,0.063W | 1 | |
| R8337 | ERJ6GEYG102 | M 1KOHM,J,1/10W | 1 | |
| R8338 | ERJ3EKF1202 | M 12KOHM, 1/16W | 1 | |
| R8340 | ERJ2GEJ103 | M 10KOHM, J,0.063W | 1 | |
| R8343,44 | ERJ2GEJ103 | M 10KOHM, J,0.063W | 2 | |
| R8346 | ERJ2GEJ103 | M 10KOHM, J,0.063W | 1 | |
| R8348 | ERJ2GEJ103 | M 10KOHM, J,0.063W | 1 | |
| R8349,50 | ERJ2GEJ332 | M 3.3KOHM, J,0.063W | 2 | |
| R8351-56 | ERJ2GEJ103 | M 10KOHM, J,0.063W | 6 | |
| R8357 | ERJ2GEJ220 | M 22 OHM, J,0.063W | 1 | |
| R8358 | ERJ2GEJ103 | M 10KOHM, J,0.063W | 1 | |
| R8362-64 | ERJ2GEJ103 | M 10KOHM, J,0.063W | 3 | |
| R8366 | ERJ2GEJ103 | M 10KOHM, J,0.063W | 1 | |
| R8367 | D0YAR0000007 | M 0.0 OHM, J,0.063W | 1 | |
| R8369 | D0YAR0000007 | M 0.0 OHM, J,0.063W | 1 | |
| R8370 | ERJ2GEJ103 | M 10KOHM, J,0.063W | 1 | |
| R8372 | ERJ2GEJ103 | M 10KOHM, J,0.063W | 1 | |
| R8373 | D0YAR0000007 | M 0.0 OHM, J,0.063W | 1 | |
| R8379 | ERJ2GEJ101 | M 100 OHM, J,0.063W | 1 | |
| R8380-83 | ERJ2GEJ470 | M 47 OHM, J,0.063W | 4 | |
| R8395 | D0YAR0000007 | M 0.0 OHM, J,0.063W | 1 | |
| R8500-02 | ERJ2RKD330 | M 33 OHM, J,0.063W | 3 | |
| R8504 | ERJ2GEJ103 | M 10KOHM, J,0.063W | 1 | |
| R8505 | D0YAR0000007 | M 0.0 OHM, J,0.063W | 1 | |
| R8512 | ERJ2GEJ103 | M 10KOHM, J,0.063W | 1 | |
| R8517-20 | ERJ2RKD330 | M 33 OHM, J,0.063W | 4 | |
| R8522 | ERJ2GEJ101 | M 100 OHM, J,0.063W | 1 | |
| R8523 | ERJ3EKF1800 | M 180 OHM, 1/16W | 1 | |
| R8524,25 | D0YAR0000007 | M 0.0 OHM, J,0.063W | 2 | |
| R8527 | D0YAR0000007 | M 0.0 OHM, J,0.063W | 1 | |
| R8528-32 | ERJ2GEJ560 | M 56 OHM, J,0.063W | 5 | |
| R8538-45 | ERJ2GEJ220 | M 22 OHM, J,0.063W | 8 | |
| R8546-48 | ERJ2GEJ332 | M 3.3KOHM, J,0.063W | 3 | |
| R8550 | ERJ2GEJ332 | M 3.3KOHM, J,0.063W | 1 | |
| R8552,53 | ERJ2GEJ182 | M 1.8KOHM, J,0.063W | 2 | |
| R8554,55 | ERJ2GEJ220 | M 22 OHM, J,0.063W | 2 | |
| R8556 | ERJ2GEJ472 | M 4.7KOHM, J,0.063W | 1 | |
| R8557,58 | ERJ2GEJ332 | M 3.3KOHM, J,0.063W | 2 | |
| R8559 | ERJ2GEJ560 | M 56 OHM, J,0.063W | 1 | |
| R8560 | D0YAR0000007 | M 0.0 OHM, J,0.063W | 1 | |
| R8561 | ERJ2RKD330 | M 33 OHM, J,0.063W | 1 | |

| Ref. No. | Part No. | Part Name & Description | Pcs | Remarks |
|---|---|---|---|---|
| R8562,63 | ERJ2GEJ103 | M 10KOHM, J,0.063W | 2 | |
| R8565 | ERJ2GEJ103 | M 10KOHM, J,0.063W | 1 | |
| R8566 | EXB28V103JX | RESISTOR ARRAY | 1 | |
| R8568 | EXB28VR000X | RESISTOR ARRAY | 1 | |
| R8570 | ERJ2RKD330 | M 33 OHM, J,0.063W | 1 | |
| R8573 | EXB28V680JX | RESISTOR ARRAY | 1 | |
| R8574 | ERJ2GEJ680 | M 68 OHM, J,0.063W | 1 | |
| R8575 | ERJ2GEJ560 | M 56 OHM, J,0.063W | 1 | |
| R8584,85 | ERJ2RKD330 | M 33 OHM, J,0.063W | 2 | |
| R8591 | ERJ2RKD330 | M 33 OHM, J,0.063W | 1 | |
| R8604 | ERJ2GEJ103 | M 10KOHM, J,0.063W | 1 | |
| R8661 | ERJ2GEJ103 | M 10KOHM, J,0.063W | 1 | |
| R8663 | ERJ2GEJ103 | M 10KOHM, J,0.063W | 1 | |
| R8664 | ERJ2RKD330 | M 33 OHM, J,0.063W | 1 | |
| R8693 | ERJ2GEJ473 | M 47KOHM, J,0.063W | 1 | |
| R8721,22 | ERJ2GEJ560 | M 56 OHM, J,0.063W | 2 | |
| R8729 | ERJ2GEJ473 | M 47KOHM, J,0.063W | 1 | |
| R8764,65 | ERJ3EKF75R0 | M 0.75HM, 1/16W | 2 | |
| R8766 | ERJ2GEJ101 | M 100 OHM, J,0.063W | 1 | |
| R8767 | ERJ3EKF75R0 | M 0.75HM, 1/16W | 1 | |
| R8769 | ERJ2RKD330 | M 33 OHM, J,0.063W | 1 | |
| R8770 | ERJ2GEJ103 | M 10KOHM, J,0.063W | 1 | |
| R8772 | ERJ2GEJ103 | M 10KOHM, J,0.063W | 1 | |
| R8787 | ERJ2GEJ473 | M 47KOHM, J,0.063W | 1 | |
| R8792 | ERJ2GEJ473 | M 47KOHM, J,0.063W | 1 | |
| R8796 | ERJ2GEJ473 | M 47KOHM, J,0.063W | 1 | |
| R8844 | ERJ2GEJ103 | M 10KOHM, J,0.063W | 1 | |
| R8850 | ERJ2GEJ560 | M 56 OHM, J,0.063W | 1 | |
| R8864 | D0YAR0000007 | M 0.0 OHM, J,0.063W | 1 | |
| R8865 | ERJ2GEJ560 | M 56 OHM, J,0.063W | 1 | |
| R8866 | ERJ3EKF91R0 | M 91 OHM, 1/16W | 1 | |
| R8875 | ERJ2GEJ473 | M 47KOHM, J,0.063W | 1 | |
| R8876-78 | D0YAR0000007 | M 0.0 OHM, J,0.063W | 3 | |
| R8900 | D0YAR0000007 | M 0.0 OHM, J,0.063W | 1 | |
| R8903,04 | ERJ2GEJ473 | M 47KOHM, J,0.063W | 2 | |
| R9062-67 | ERJ3GEYJ101 | M 100 OHM,J,1/16W | 6 | |
| R9070 | ERJ3GEYJ470 | M 47 OHM,J,1/16W | 1 | |
| R9099 | D0GB103JA057 | M 10KOHM,J,1/16W | 1 | |
| R9101,02 | D0GB103JA057 | M 10KOHM,J,1/16W | 2 | |
| R9104,05 | D0GB103JA057 | M 10KOHM,J,1/16W | 2 | |
| R9107 | ERJ3GEYJ332 | M 3.3KOHM,J,1/16W | 1 | |
| R9108,09 | D0GB103JA057 | M 10KOHM,J,1/16W | 2 | |
| R9110 | ERJ3GEYJ101 | M 100 OHM,J,1/16W | 1 | |
| R9112 | D0GB103JA057 | M 10KOHM,J,1/16W | 1 | |
| R9113 | ERJ3GEYJ100 | M 10 OHM,J,1/16W | 1 | |
| R9115,16 | ERJ3GEYJ101 | M 100 OHM,J,1/16W | 2 | |

| Ref. No. | Part No. | Part Name & Description | Pcs | Remarks |
|---|---|---|---|---|
| R9119 | EXB38V470J | RESISTOR ARRAY | 1 | |
| R9120 | ERJ3GEYJ101 | M 100 OHM,J,1/16W | 1 | |
| R9121 | ERJ3GEYJ104 | M 100KOHM,J,1/16W | 1 | |
| R9122,23 | D0GB103JA057 | M 10KOHM,J,1/16W | 2 | |
| R9126 | D0GB103JA057 | M 10KOHM,J,1/16W | 1 | |
| R9127 | ERJ3GEYJ683 | M 68KOHM,J,1/16W | 1 | |
| R9129 | ERJ3GEYJ683 | M 68KOHM,J,1/16W | 1 | |
| R9131-33 | ERJ3GEYJ472 | M 4.7KOHM,J,1/16W | 3 | |
| R9134 | ERJ3GEYJ333 | M 33KOHM,J,1/16W | 1 | |
| R9135 | ERJ3GEYJ472 | M 4.7KOHM,J,1/16W | 1 | |
| R9141-45 | ERJ3GEYJ101 | M 100 OHM,J,1/16W | 5 | |
| R9149 | ERJ3GEYJ472 | M 4.7KOHM,J,1/16W | 1 | |
| R9150,51 | ERJ3GEYJ220 | M 22 OHM,J,1/16W | 2 | |
| R9154,55 | ERJ3GEYJ562 | M 5.6KOHM,J,1/16W | 2 | |
| R9156 | D0GB103JA057 | M 10KOHM,J,1/16W | 1 | |
| R9158,59 | D0GB103JA057 | M 10KOHM,J,1/16W | 2 | |
| R9160,61 | J0JCC0000100 | CHIP INDUCTOR | 2 | |
| R9164,65 | ERJ3GEYJ222 | M 2.2KOHM,J,1/16W | 2 | |
| R9166 | D0GB103JA057 | M 10KOHM,J,1/16W | 1 | |
| R9167 | ERJ3GEYJ101 | M 100 OHM,J,1/16W | 1 | |
| R9170-72 | D0GB393JA041 | M 39KOHM,J,1/16W | 3 | |
| R9173,74 | D0GB103JA057 | M 10KOHM,J,1/16W | 2 | |
| R9177 | ERJ3GEYJ223 | M 22KOHM,J,1/16W | 1 | |
| R9181-84 | D0GB102JA057 | M 1KOHM,J,1/16W | 4 | |
| R9185,86 | ERJ3GEYJ220 | M 22 OHM,J,1/16W | 2 | |
| R9187,88 | ERJ3GEYJ562 | M 5.6KOHM,J,1/16W | 2 | |
| R9189,90 | D0GB103JA057 | M 10KOHM,J,1/16W | 2 | |
| R9193 | D0GB103JA057 | M 10KOHM,J,1/16W | 1 | |
| R9194 | J0JCC0000100 | CHIP INDUCTOR | 1 | |
| R9196 | D0GB103JA057 | M 10KOHM,J,1/16W | 1 | |
| R9199 | ERJ3GEYJ272 | M 2.7KOHM,J,1/16W | 1 | |
| R9200,01 | ERJ3GEYJ100 | M 10 OHM,J,1/16W | 2 | |
| R9203 | D0GB102JA057 | M 1KOHM,J,1/16W | 1 | |
| R9205 | ERJ3GEYJ472 | M 4.7KOHM,J,1/16W | 1 | |
| R9206,07 | D0GB102JA057 | M 1KOHM,J,1/16W | 2 | |
| R9215 | D0GB123JA057 | M 12KOHM,J,1/16W | 1 | |
| R9217-22 | D0GB103JA057 | M 10KOHM,J,1/16W | 6 | |
| R9223 | ERJ3GEYJ272 | M 2.7KOHM,J,1/16W | 1 | |
| R9225 | ERJ3GEYJ272 | M 2.7KOHM,J,1/16W | 1 | |
| R9237 | D0GB103JA057 | M 10KOHM,J,1/16W | 1 | |
| R9240 | J0JCC0000100 | CHIP INDUCTOR | 1 | |
| R9317 | ERJ3GEYJ391 | M 390 OHM,J,1/16W | 1 | |
| R9347,48 | EXB2HV220JV | RESISTOR ARRAY | 2 | |
| R9349 | EXB2HV470JV | RESISTOR ARRAY | 1 | |
| R9350,51 | ERJ3GEYJ220 | M 22 OHM,J,1/16W | 2 | |
| R9352 | EXB2HV220JV | RESISTOR ARRAY | 1 | |
| R9354-56 | EXB2HV220JV | RESISTOR ARRAY | 3 | |
| R9361,62 | ERJ3GEYJ220 | M 22 OHM,J,1/16W | 2 | |
| R9363 | EXB2HV470JV | RESISTOR ARRAY | 1 | |
| R9369 | ERJ3GEYJ472 | M 4.7KOHM,J,1/16W | 1 | |
| R9370 | D0GB103JA057 | M 10KOHM,J,1/16W | 1 | |
| R9371 | ERJ3GEYJ104 | M 100KOHM,J,1/16W | 1 | |
| R9379 | J0JCC0000100 | CHIP INDUCTOR | 1 | |
| R9380 | ERJ3GEYJ560 | M 56 OHM,J,1/16W | 1 | |
| R9383 | D0GB102JA057 | M 1KOHM,J,1/16W | 1 | |
| R9384,85 | ERJ3GEYJ472 | M 4.7KOHM,J,1/16W | 2 | |
| R9391 | ERJ3GEYJ104 | M 100KOHM,J,1/16W | 1 | |
| R9392,93 | J0JCC0000100 | CHIP INDUCTOR | 2 | |

| Ref. No. | Part No. | Part Name & Description | Pcs | Remarks |
|---|---|---|---|---|
| R9396-99 | ERJ3GEYJ220 | M 22 OHM,J,1/16W | 4 | |
| R9402 | ERJ6GEY0R00V | M 0 OHM, 1/10W | 1 | |
| R9403 | EXB2HV470JV | RESISTOR ARRAY | 1 | |
| R9500 | D0GB103JA057 | M 10KOHM,J,1/16W | 1 | |
| R9502 | D0GB103JA057 | M 10KOHM,J,1/16W | 1 | |
| R9503 | ERJ3GEYJ470 | M 47 OHM,J,1/16W | 1 | |
| R9506 | ERJ3GEYJ220 | M 22 OHM,J,1/16W | 1 | |
| R9507 | J0JCC0000100 | CHIP INDUCTOR | 1 | |
| R9511-13 | ERJ3GEYJ470 | M 47 OHM,J,1/16W | 3 | |
| R9516 | D0GB103JA057 | M 10KOHM,J,1/16W | 1 | |
| R9518 | J0JCC0000100 | CHIP INDUCTOR | 1 | |
| R9523 | ERJ3GEYJ472 | M 4.7KOHM,J,1/16W | 1 | |
| R9525 | D0GB103JA057 | M 10KOHM,J,1/16W | 1 | |
| R9526 | J0JCC0000100 | CHIP INDUCTOR | 1 | |
| R9530 | D0GB103JA057 | M 10KOHM,J,1/16W | 1 | |
| R9531-33 | ERJ3GEYJ470 | M 47 OHM,J,1/16W | 3 | |
| R9534 | EXB38V470J | RESISTOR ARRAY | 1 | |
| R9535,36 | ERJ3GEYJ470 | M 47 OHM,J,1/16W | 2 | |
| R9538,39 | D0GB103JA057 | M 10KOHM,J,1/16W | 2 | |
| R9541 | D0GB103JA057 | M 10KOHM,J,1/16W | 1 | |
| R9543,44 | D0GB103JA057 | M 10KOHM,J,1/16W | 2 | |
| R9545 | ERJ3GEYJ304 | M 300KOHM,J,1/16W | 1 | |
| R9548-50 | D0GB103JA057 | M 10KOHM,J,1/16W | 3 | |
| R9552 | D0GB103JA057 | M 10KOHM,J,1/16W | 1 | |
| R9553,54 | J0JCC0000100 | CHIP INDUCTOR | 2 | |
| R9557,58 | J0JCC0000100 | CHIP INDUCTOR | 2 | |
| R9561 | EXB38V222J | RESISTOR ARRAY | 1 | |
| R9562 | ERJ3GEYJ470 | M 47 OHM,J,1/16W | 1 | |
| R9563-66 | EXB2HV470JV | RESISTOR ARRAY | 4 | |
| R9567 | D0GB103JA057 | M 10KOHM,J,1/16W | 1 | |
| R9569 | J0JCC0000100 | CHIP INDUCTOR | 1 | |
| R9824-27 | ERJ3GEYJ101 | M 100 OHM,J,1/16W | 4 | |
| R9828 | ERJ3GEYJ104 | M 100KOHM,J,1/16W | 1 | |
| R9839 | EXB38V101JV | RESISTOR ARRAY | 1 | |
| R9840 | ERJ3GEYJ220 | M 22 OHM,J,1/16W | 1 | |
| R9845 | D0GB103JA057 | M 10KOHM,J,1/16W | 1 | |
| R9846,47 | EXB2HV222JV | RESISTOR ARRAY | 2 | |
| R9848,49 | EXB2HV470JV | RESISTOR ARRAY | 2 | |
| R9850 | D0GB473JA057 | M 47KOHM,J,1/16W | 1 | |
| R9854 | ERJ3GEYJ101 | M 100 OHM,J,1/16W | 1 | |
| R9859 | EXB38V101JV | RESISTOR ARRAY | 1 | |
| R9861-63 | D0GB103JA057 | M 10KOHM,J,1/16W | 3 | |
| R9868 | ERJ3GEYJ104 | M 100KOHM,J,1/16W | 1 | |
| R9869-71 | D0GB103JA057 | M 10KOHM,J,1/16W | 3 | |
| R9872 | J0JCC0000100 | CHIP INDUCTOR | 1 | |
| R9874 | J0JCC0000100 | CHIP INDUCTOR | 1 | |
| R9878 | ERJ3EKF1102 | M 11KOHM, 1/16W | 1 | |
| R9879 | ERJ3EKF1302 | M 13KOHM, 1/16W | 1 | |
| R9886,87 | ERJ3EKF5602 | M 56KOHM, 1/16W | 2 | |
| R9888 | ERJ3EKF1102 | M 11KOHM, 1/16W | 1 | |
| R9889 | ERJ3EKF1742 | M17.2KOHM, 1/16W | 1 | |
| R9890 | ERJ3EKF4752 | M47.5KOHM, 1/16W | 1 | |
| R9891 | ERJ3EKF1272 | M12.7KOHM, 1/16W | 1 | |
| R9892 | ERJ3GEYJ104 | M 100KOHM,J,1/16W | 1 | |
| R9893 | ERJ3EKF5602 | M 56KOHM, 1/16W | 1 | |
| R9894 | ERJ3EKF1102 | M 11KOHM, 1/16W | 1 | |
| R9895 | ERJ3GEYJ104 | M 100KOHM,J,1/16W | 1 | |
| R9896 | ERJ3EKF1822 | M18.2KOHM, 1/16W | 1 | |
| R9897 | ERJ3EKF4752 | M47.5KOHM, 1/16W | 1 | |
| R9901,02 | J0JCC0000100 | CHIP INDUCTOR | 2 | |
| R9903 | EXB2HV470JV | RESISTOR ARRAY | 1 | |
| R9904 | ERJ3GEYJ470 | M 47 OHM,J,1/16W | 1 | |
| R9905 | ERJ3GEYJ330 | M 33 OHM,J,1/16W | 1 | |
| R9906 | EXB38V470J | RESISTOR ARRAY | 1 | |
| R9907 | D0GB151JA057 | M 150 OHM,J,1/16W | 1 | |
| R9908-11 | J0JCC0000100 | CHIP INDUCTOR | 4 | |

| Ref. No. | Part No. | Part Name & Description | Pcs | Remarks |
|---|---|---|---|---|
| R9912 | D0GB103JA057 | M 10KOHM,J,1/16W | 1 | |
| R9915-18 | J0JCC0000100 | CHIP INDUCTOR | 4 | |
| R9919 | D0GB102JA057 | M 1KOHM,J,1/16W | 1 | |
| R9922 | J0JCC0000100 | CHIP INDUCTOR | 1 | |
| R9928,29 | J0JCC0000100 | CHIP INDUCTOR | 2 | |
| R9936-39 | ERJ3EKF1001 | M 1KOHM, 1/16W | 4 | |
| R9940 | ERJ3GEYJ330 | M 33 OHM,J,1/16W | 1 | |
| R9941,42 | ERJ3GEYJ470 | M 47 OHM,J,1/16W | 2 | |
| R9943-51 | EXB38V470J | RESISTOR ARRAY | 9 | |
| R9952-55 | ERJ3GEYJ470 | M 47 OHM,J,1/16W | 4 | |
| R9956 | D0GB103JA057 | M 10KOHM,J,1/16W | 1 | |
| R9960 | J0JCC0000100 | CHIP INDUCTOR | 1 | |
| R9961 | D0GB103JA057 | M 10KOHM,J,1/16W | 1 | |
| | | | | |
| RM2501 | PNA4701M05TV | REMOCON RECEIVER | 1 | |
| | | | | |
| S2 | K1KA02BA0061 | 2P CONNECTOR | 1 | |
| | | | | |
| SC2 | K1KA02A00626 | 2P CONNECTOR | 1 | |
| SC20 | K1KY30AA0369 | 30P CONNECTOR | 1 | |
| SC30 | K1KA10AA0191 | 10P CONNECTOR | 1 | |
| SC41,42 | K1ML80B00001 | 80P CONNECTOR | 2 | |
| SC45,46 | K1KA09A00239 | 9P CONNECTOR | 2 | |
| | | | | |
| SCMM1,M2 | TMME260 | CLAMPER | 2 | |
| | | | | |
| SD1-D4 | K1MN96B00005 | 96P CONNECTOR | 4 | |
| SD46 | K1KB09AA0213 | 9P CONNECTOR | 1 | |
| | | | | |
| SS11 | K1KA02A00626 | 2P CONNECTOR | 1 | |
| SS12 | K1KA10AA0194 | 10P CONNECTOR | 1 | |
| SS23 | K1KA12AA0194 | 12P CONNECTOR | 1 | |
| SS34 | K1KA03AA0193 | 3P CONNECTOR | 1 | |
| SS53A-6A | K1MN13BA0258 | 13P CONNECTOR | 4 | |
| | | | | |
| SU1-U4 | K1MN96B00005 | 96P CONNECTOR | 4 | |
| SU45 | K1KB09AA0213 | 9P CONNECTOR | 1 | |
| | | | | |
| SW2500 | K0F122A00172 | SWITCREMOTE CONTROLH | 1 | |
| SW3754-58 | EVQPC105K | SWITCH | 5 | |
| | | | | |
| T6602 | ETS25AZ169AD | SWITCHING TRANS | 1 | |
| | | | | |
| TU8300 | ENGE6602KF | TUNER | 1 | PAVCA ⚠ |
| | | | | |
| VR6000 | EVMEASA00B14 | CONTROL 10KOHMB 0.3W | 1 | |
| VR6600 | EVMEASA00B13 | CONTROL 1KOHMB 0.3W | 1 | |
| VR6602 | EVMEASA00B53 | CONTROL 5KOHMB 0.3W | 1 | |
| | | | | |
| X1100 | H0J100500035 | CRYSTAL | 1 | |
| X2010 | H0J245500082 | CRYSTAL | 1 | |
| X4500 | H0J270500113 | CRYSTAL | 1 | |
| X8001 | H0J270500061 | CRYSTAL | 1 | |
| X8300 | H0J250500079 | CRYSTAL | 1 | PAVCA |
| X9000 | H2D100500004 | CRYSTAL | 1 | |
| X9200 | H0J200500038 | CRYSTAL | 1 | |
| | | | | |
| ZA3701 | K4CZ01000027 | COMPATIBLE WITH JALCO K9 | 1 | |
| ZA3702 | K4CD01000013 | AV TERMINAL | 1 | |
| ZA4700-02 | K4AD01D00004 | TERMINAL | 3 | |
| ZA6001,02 | K4CD01000011 | AV TERMINAL | 2 | |
| ZA6005 | K4CD01000011 | AV TERMINAL | 1 | |
| ZA6401-03 | K4CD01000011 | AV TERMINAL | 3 | |
| ZA7101-04 | K4AD01Z00001 | TERMINAL | 4 | |
| ZA7201-04 | K4AD01Z00001 | TERMINAL | 4 | |
| ZA9001 | K4CD01000011 | AV TERMINAL | 1 | |
| | | | | |
| C404 | F0CZZ445A097 | E 0.044UF, 200V | 1 | |

| Ref. No. | Part No. | Part Name & Description | Pcs | Remarks |
|---|---|---|---|---|
| C406 | F1E2J4730001 | C 0.047PF, , 600V | 1 | |
| C407 | F2B2W220A032 | C 22UF, 450V | 1 | ⚠ |
| C408 | ECJ1VB1H102K | C 1000PF, K, 50V | 1 | |
| C410 | F1J1E105A080 | E 1 UF 25V | 1 | |
| C413 | ECJ1VB1E104K | C 0.10UF, K, 25V | 1 | |
| C420 | F1J1E105A080 | E 1 UF 25V | 1 | |
| C421 | ECJ1VB1E104K | C 0.10UF, K, 25V | 1 | |
| C423 | ECJ1VB1H472K | C 4700PF, K, 50V | 1 | |
| C425 | F1J1E105A080 | E 1 UF 25V | 1 | |
| C426 | ECJ1VC1H471J | C 470PF, J, 50V | 1 | |
| C427 | F1H1C105A071 | C 1UF, K, 16V | 1 | |
| C428 | ECJ1XC1H221J | C 220PF, J, 50V | 1 | |
| C429 | F1E2J4730001 | C 0.047PF, , 600V | 1 | |
| C431 | ECJ1VB1H102K | C 1000PF, K, 50V | 1 | |
| C432,33 | F1H1C105A071 | C 1UF, K, 16V | 2 | |
| C435 | ECJ1XC1H101J | C 100PF, J, 50V | 1 | |
| C436 | F1H1C105A071 | C 1UF, K, 16V | 1 | |
| C437 | ECJ1VB1H103K | C 0.001UF, K, 50V | 1 | |
| C443,44 | ECKD3A102KBP | C 1000PF, K, 1KV | 2 | |
| C445 | F1H1C105A071 | C 1UF, K, 16V | 1 | |
| C446 | F2B2W3910010 | C 390UF, 450V | 1 | ⚠ |
| C450 | ECJ1VB1H103K | C 0.001UF, K, 50V | 1 | |
| C451 | ECKD3A101KBP | C 100PF, K, 1KV | 1 | |
| C457 | ECWH12333RHV | P 0.013UF,J,1.2KV | 1 | |
| C462 | F1J1E105A080 | E 1 UF 25V | 1 | |
| C463 | F1H1H2200008 | E 22UF, 50V | 1 | |
| C467 | F1BAF221A107 | C 220UF, 250V | 1 | ⚠ |
| C468 | ECJ1VB1H103K | C 0.001UF, K, 50V | 1 | |
| C469 | F1BAF221A107 | C 220UF, 250V | 1 | ⚠ |
| C470 | F0CAF335A080 | C 0.033UF, 250V | 1 | ⚠ |
| C472 | F1BAF221A107 | C 220UF, 250V | 1 | ⚠ |
| C474,75 | F1BAF221A107 | C 220UF, 250V | 2 | ⚠ |
| C478 | F1BAF221A107 | C 220UF, 250V | 1 | ⚠ |
| C492 | ECA1HM100 | E 10UF, 50V | 1 | |
| C493 | ECA1HM470 | E 47UF, 50V | 1 | |
| C493 | F2A1H4700057 | E 47UF, 50V | 1 | |
| C497 | F2A1H4700057 | E 47UF, 50V | 1 | |
| C501,02 | ECJ1VB1H103K | C 0.001UF, K, 50V | 2 | |
| C504 | F1H1C105A071 | C 1UF, K, 16V | 1 | |
| C505 | ECJ1VB1H102K | C 1000PF, K, 50V | 1 | |
| C506 | ECJ1VB1H103K | C 0.001UF, K, 50V | 1 | |
| C507 | ECJ1VB1E104K | C 0.10UF, K, 25V | 1 | |
| C509 | ECA1EHG101 | E 100UF, 25V | 1 | |
| C511 | ECJ1VB1H102K | C 1000PF, K, 50V | 1 | |
| C515 | F2A1A1220015 | E 1200UF, 10V | 1 | |
| C516 | ECJ1VB1C474K | C 0.47UF,K, 16V | 1 | |
| C517 | F2A1E221A096 | E 220UF, 25V | 1 | |
| C518,19 | F1H1C105A071 | C 1UF, K, 16V | 2 | |
| C520 | F0C2E683A160 | E 0.068UF, 250V | 1 | |
| C521 | ECJ1VB1H103K | C 0.001UF, K, 50V | 1 | |
| C522 | F1E2E1030002 | C 0.010PF, , 600V | 1 | |
| C523 | F1J1E105A080 | E 1 UF 25V | 1 | |
| C526 | ECJ1VB1H223K | C 0.22UF, K, 50V | 1 | |
| C528 | ECJ1VB1H102K | C 1000PF, K, 50V | 1 | |
| C529 | ECJ2FB1C475K | C 47UF, K, 16V | 1 | |
| C530 | ECJ1VB1E333K | C 0.033UF, K, 25V | 1 | |
| C531 | ECJ1VB1E104K | C 0.10UF, K, 25V | 1 | |
| C534 | F1H1H471A792 | E 470UF, 50V | 1 | |
| C546,47 | ECJ1VB1H102K | C 1000PF, K, 50V | 2 | |
| C552 | ECJ1VB1E104K | C 0.10UF, K, 25V | 1 | |
| C554 | F1H1C105A071 | C 1UF, K, 16V | 1 | |
| C555 | F2A2C4710003 | E 470UF, 160V | 1 | ⚠ |
| C556 | F2A1E3320039 | E 3300PF, 25V | 1 | |
| C558 | F2A1E4710065 | E 470UF, 25V | 1 | |

| Ref. No. | Part No. | Part Name & Description | Pcs | Remarks |
|---|---|---|---|---|
| C559 | F2A1A1020084 | E 1000UF, 10V | 1 | |
| C562 | F1H1H223A219 | E 0.022UF, 50V | 1 | |
| C571 | ECJ1VC1H330J | C 33PF, J, 50V | 1 | |
| C574 | ECJ1VB1E104K | C 0.10UF, K, 25V | 1 | |
| C577 | F2A2A330A022 | E 33UF, 100V | 1 | ⚠ |
| C581 | ECJ2VB1H223K | C 0.022UF, K, 50V | 1 | |
| C583 | ECJ1VB1H102K | C 1000PF, K, 50V | 1 | |
| C584 | ECJ2VB1H223K | C 0.022UF, K, 50V | 1 | |
| C585 | F1H1H223A219 | E 0.022UF, 50V | 1 | |
| C587 | ECJ1VB1H332K | C 3300PF, K, 50V | 1 | |
| C590 | ECJ1XB1H104K | C 10PF, J, 50V | 1 | |
| C601 | ECJ1VB1H103K | C 0.001UF, K, 50V | 1 | |
| C603 | F1J1E105A080 | E 1 UF 25V | 1 | |
| C604,05 | F2A2D1510008 | E 150UF, 200V | 2 | ⚠ |
| C607 | F1H1C105A071 | C 1UF, K, 16V | 1 | |
| C610 | F1J1E105A080 | E 1 UF 25V | 1 | |
| C611 | F2B2T1420003 | E 142UF, 220V | 1 | ⚠ |
| C612 | ECJ1VB1H103K | C 0.001UF, K, 50V | 1 | |
| C616 | ECKD3A102KBP | C 1000PF, K, 1KV | 1 | |
| C619 | F1H1C105A071 | C 1UF, K, 16V | 1 | |
| C620 | F1J1E105A080 | E 1 UF 25V | 1 | |
| C623 | ECA1HM100 | E 10UF, 50V | 1 | |
| C624 | ECJ1VB1H103K | C 0.001UF, K, 50V | 1 | |
| C625 | F2A1H1000083 | E 10UF, 50V | 1 | |
| C626 | ECJ1VB1H103K | C 0.001UF, K, 50V | 1 | |
| C627 | ECJ1VB1H102K | C 1000PF, K, 50V | 1 | |
| C630,31 | ECJ1VB1H103K | C 0.001UF, K, 50V | 2 | |
| C632 | ECJ2XC1H330J | C 33PF, J, 50V | 1 | |
| C639 | ECJ1VB1H103K | C 0.001UF, K, 50V | 1 | |
| C640 | ECJ1VC1H330J | C 33PF, J, 50V | 1 | |
| C641 | ECJ1VB1H102K | C 1000PF, K, 50V | 1 | |
| C650,51 | ECJ1VB1E104K | C 0.10UF, K, 25V | 2 | |
| C653 | ECJ1VB1H102K | C 1000PF, K, 50V | 1 | |
| C657 | ECJ1VB1H102K | C 1000PF, K, 50V | 1 | |
| C658 | F1J1E105A080 | E 1 UF 25V | 1 | |
| C660 | ECJ2FB1C225K | C 22UF, K, 16V | 1 | |
| C661 | ECJ1VB1H103K | C 0.001UF, K, 50V | 1 | |
| C662 | ECJ2VB1H103K | C 0.01UF, K, 50V | 1 | |
| C665 | ECJ1XC1H101J | C 100PF, J, 50V | 1 | |
| C666 | ECJ1VB1H103K | C 0.001UF, K, 50V | 1 | |
| C667,68 | ECJ1VB1H102K | C 1000PF, K, 50V | 2 | |
| C670 | ECJ1VB1E104K | C 0.10UF, K, 25V | 1 | |
| C671 | ECJ2VB1E104K | C 0.1UF, K, 25V | 1 | |
| C672 | ECJ1VB1E104K | C 0.10UF, K, 25V | 1 | |
| C673 | F1E2J4730001 | C 0.047PF, , 600V | 1 | |
| | | | | |
| D401 | B0FBBT000008 | DIODE | 1 | ⚠ |
| D404 | B0EBKT000007 | DIODE | 1 | ⚠ |
| D407,08 | B0ACDJ000010 | DIODE | 2 | |
| D411 | B0BB17000009 | DIODE | 1 | |
| D415 | B0JAME000099 | DIODE | 1 | |
| D416 | B0HAMP000067 | DIODE | 1 | |
| D417 | B0EAMR000009 | DIODE | 1 | |
| D418 | B0BC8R100013 | ZENER DIODE | 1 | |
| D419,20 | B0EAMR000009 | DIODE | 2 | |
| D423 | MA188 | DIODE | 1 | |
| D425 | MA188 | DIODE | 1 | |
| D429 | B0EAKT000048 | DIODE | 1 | |
| D431 | B0JCDD000002 | DIODE | 1 | |
| D433 | B0BC01400033 | ZENER DIODE | 1 | |
| D435 | B0EAKT000048 | DIODE | 1 | |
| D436 | B0AACK000004 | DIODE | 1 | |
| D436 | MA165TA5 | DIODE | 1 | |
| D438 | B0BC02000014 | ZENER DIODE | 1 | |

| Ref. No. | Part No. | Part Name & Description | Pcs | Remarks |
|---|---|---|---|---|
| D439 | B0EAKT000048 | DIODE | 1 | |
| D441 | B0HAMM000122 | DIODE | 1 | |
| D444 | B0HAMM000122 | DIODE | 1 | |
| D445 | MTZJ10B | ZENER DIODE | 1 | |
| D501 | B0EAMR000010 | DIODE | 1 | |
| D503 | B0AACK000004 | DIODE | 1 | |
| D503 | MA165TA5 | DIODE | 1 | |
| D504 | B0AACK000004 | DIODE | 1 | |
| D504 | MA165TA5 | DIODE | 1 | |
| D506 | B0ACDJ000010 | DIODE | 1 | |
| D507,08 | B0BC7R400023 | ZENER DIODE | 2 | |
| D509 | B0JANG000018 | DIODE | 1 | |
| D511 | B0JAML000011 | DIODE | 1 | |
| D512 | B0ACDJ000010 | DIODE | 1 | |
| D516-18 | B0BA03300004 | ZENER DIODE | 3 | |
| D520 | B0ACDJ000010 | DIODE | 1 | |
| D521 | B0JAME000099 | DIODE | 1 | |
| D522,23 | B0JCDD000002 | DIODE | 2 | |
| D524 | B0AACK000004 | DIODE | 1 | |
| D524 | MA165TA5 | DIODE | 1 | |
| D531 | B0HBSN000013 | DIODE | 1 | |
| D535 | MA188 | DIODE | 1 | |
| D536 | B0JBSG000026 | DIODE | 1 | |
| D538 | B0BC5R100039 | ZENER DIODE | 1 | |
| D539,40 | B0HARR000019 | DIODE | 2 | |
| D543 | B0BC01400033 | ZENER DIODE | 1 | |
| D544,45 | B0BA02100001 | ZENER DIODE | 2 | |
| D546 | B0BA02800001 | ZENER DIODE | 1 | |
| D549 | B0BC02500008 | ZENER DIODE | 1 | |
| D569,70 | B0BA05100010 | ZENER DIODE | 2 | |
| D579 | B0AACK000004 | DIODE | 1 | |
| D582 | MAZ705600F | ZENER DIODE | 1 | |
| D584 | MAZ706200F | ZENER DIODE | 1 | |
| D586 | B0HAMP000067 | DIODE | 1 | |
| D598 | B0BC5R100039 | ZENER DIODE | 1 | |
| D599 | B0JCND000009 | DIODE | 1 | |
| D600 | B0BC7R400023 | ZENER DIODE | 1 | |
| D601 | B0BC5R100039 | ZENER DIODE | 1 | |
| D602 | B0BC8R100013 | ZENER DIODE | 1 | |
| D603 | B0BA01900005 | ZENER DIODE | 1 | |
| D701,02 | B0BC5R100039 | ZENER DIODE | 2 | |
| D703 | B0EAKT000048 | DIODE | 1 | |
| | | | | |
| F403 | K5G631B00007 | FUSE | 1 | ⚠ |
| | | | | |
| IC401 | CNC1S171R | IC | 1 | ⚠ |
| IC403 | CNC1S171R | IC | 1 | ⚠ |
| IC406 | C0DBZZZ00082 | IC | 1 | |
| IC408 | B3PBA0000459 | IC | 1 | ⚠ |
| IC409 | MIP3E30MPSCF | IC | 1 | ⚠ |
| IC411 | C0DAEMZ00001 | IC | 1 | |
| IC412 | CNC1S171R | IC | 1 | ⚠ |
| IC501 | C2ABDB000114 | IC | 1 | |
| IC502 | C0EBH0000210 | IC | 1 | |
| IC504 | C0DAEMZ00001 | IC | 1 | |
| IC505 | B3PBA0000459 | IC | 1 | ⚠ |
| IC506 | C0DAEMZ00001 | IC | 1 | |
| IC507 | B3PBA0000459 | IC | 1 | ⚠ |
| IC508 | C0DAEMZ00001 | IC | 1 | |
| IC509 | C0BBAA000039 | IC | 1 | |
| IC510 | C0DBAZG00034 | IC | 1 | |
| IC511-13 | C0DAEMZ00001 | IC | 3 | |
| IC520 | C9ZB00000561 | IC | 1 | |
| | | | | |
| L403 | EXCELSA35 | BEAD CHOKE | 1 | |
| L404,05 | G0B123K00004 | CHOKE COIL | 2 | ⚠ |
| L406 | J0JCC0000004 | CHIP INDUCTOR | 1 | |
| L410 | G0B353D00002 | CHOKE COIL | 1 | ⚠ |
| L511 | G0A470ZA0035 | CHOKE COIL | 1 | |
| L512 | G0C4R7JA0021 | PEAKING COIL | 1 | |
| L514 | G0A100GA0013 | CHOKE COIL | 1 | |
| L515 | J0JKB0000037 | FLAT CORE | 1 | |
| L518 | J0JCC0000004 | CHIP INDUCTOR | 1 | |

| Ref. No. | Part No. | Part Name & Description | Pcs | Remarks |
|---|---|---|---|---|
| | | | | |
| P2 | K1KA02A00626 | 2P CONNECTOR | 1 | |
| P6 | K1KA12AA0191 | 12P CONNECTOR | 1 | |
| P7 | K1KA11AA0191 | 11P CONNECTOR | 1 | |
| P9 | K1KA03A00537 | 3P CONNECTOR | 1 | |
| P11 | K1KA02A00626 | 2P CONNECTOR | 1 | |
| P12 | K1KA08A00514 | 8P CONNECTOR | 1 | |
| P25 | K1KA13AA0194 | 13P CONNECTOR | 1 | |
| | | | | |
| PMM1 | TMME047 | CLAMPER | 1 | |
| PMM2,M3 | TMM7464-2 | CLAMPER | 2 | |
| PMM5 | TMM7464-2 | CLAMPER | 1 | |
| PMM6-M8 | TMME260 | CLAMPER | 3 | |
| | | | | |
| PR401 | K5Y502BA0001 | FUSE | 1 | ⚠ |
| PR402 | ERBSE0R50U | FUSE | 1 | ⚠ |
| PR501 | ERBSE0R50U | FUSE | 1 | ⚠ |
| PR505 | ERBSE5R00U | FUSE | 1 | ⚠ |
| PR509 | ERBSE0R50U | FUSE | 1 | ⚠ |
| PR601 | K5G312B00012 | FUSE | 1 | ⚠ |
| | | | | |
| Q401 | B1CHND000004 | TRANSISTOR | 1 | |
| Q402 | B1CBGD000001 | FET | 1 | |
| Q404 | B1BCCF000022 | TRANSISTOR | 1 | |
| Q406 | B1DEKQ000003 | TRANSISTOR | 1 | ⚠ |
| Q407 | B1HFCFA00021 | TRANSISTOR | 1 | |
| Q408,09 | B1DHCD000034 | TRANSISTOR | 2 | |
| Q410 | 2SD1819ARL | TRANSISTOR | 1 | |
| Q411 | B1HFCFA00021 | TRANSISTOR | 1 | |
| Q412,13 | B1DEGQ000070 | TRANSISTOR | 2 | ⚠ |
| Q420 | 2SD1819ARL | TRANSISTOR | 1 | |
| Q422 | B1CBGD000001 | FET | 1 | |
| Q501,02 | 2SD1820A0L | TRANSISTOR | 2 | |
| Q507 | B1DAGQ000013 | TRANSISTOR | 1 | |
| Q508 | B1HBCFA00033 | TRANSISTOR | 1 | |
| Q509 | B1HDCEA00001 | TRANSISTOR | 1 | |
| Q510 | B1DFDD000019 | TRANSISTOR | 1 | |
| Q517 | B1HBCFA00033 | TRANSISTOR | 1 | |
| Q520 | B1HBCFA00033 | TRANSISTOR | 1 | |
| Q521 | B1CBGD000001 | FET | 1 | |
| Q524 | B1CFGF000008 | TRANSISTOR | 1 | |
| Q525 | B1CBGD000001 | FET | 1 | |
| Q527 | B1CERM000012 | FET | 1 | |
| Q530 | B1ADCF000111 | TRANSISTOR | 1 | |
| Q535 | 2SD1819ARL | TRANSISTOR | 1 | |
| Q537 | B1DFDD000019 | TRANSISTOR | 1 | |
| Q538 | B1CBGD000001 | FET | 1 | |
| Q540 | B1DFDD000019 | TRANSISTOR | 1 | |
| Q541 | B1CBGD000001 | FET | 1 | |
| Q553 | 2SD1819ARL | TRANSISTOR | 1 | |
| Q554 | B1CHND000004 | TRANSISTOR | 1 | |
| Q555,56 | B1CFRD000018 | FET | 2 | |
| Q563 | 2SD1819ARL | TRANSISTOR | 1 | |
| Q564,65 | B1ADCF000111 | TRANSISTOR | 2 | |
| Q566 | 2SD1819ARL | TRANSISTOR | 1 | |
| Q569 | B1CBGD000001 | FET | 1 | |
| | | | | |
| R401 | ERJ6GEYG103 | M 10KOHM,J,1/10W | 1 | |
| R402 | ERJ6GEYG821 | M 820 OHM,J,1/10W | 1 | |
| R403 | ERJ6GEYG105 | M 1MOHM,J,1/10W | 1 | |
| R404 | ERJ6GEYG153 | M 15KOHM,J,1/10W | 1 | |
| R405 | D0B1825JA033 | M1.22MOHM,J,0.05 W | 1 | ⚠ |
| R406 | ERX12SJ4R7 | M 4.7 OHM, J,1/2W | 1 | |
| R407 | D1AB2203A023 | CHIP RESISTOR | 1 | |
| R408 | ERJ6GEYF472 | M 4.7KOHM,F,1/10W | 1 | |
| R409 | ERJ6GEYG102 | M 1KOHM,J,1/10W | 1 | |
| R410 | D1AB2203A023 | CHIP RESISTOR | 1 | |
| R411 | ERF5TJ100 | W 10 OHM, J, 5W | 1 | ⚠ |
| R414 | ERJ8GEYJ153 | M 15KOHM, J,1/8W | 1 | |
| R415 | D1AB2203A023 | CHIP RESISTOR | 1 | |

| Ref. No. | Part No. | Part Name & Description | Pcs | Remarks |
|---|---|---|---|---|
| R417 | D1AB4303A023 | CHIP RESISTOR | 1 | |
| R418 | ERJ6GEYJ6R8V | M 6.8 OHM,J,1/10W | 1 | |
| R419 | ERJ6GEYG104 | M 100KOHM,J,1/10W | 1 | |
| R421 | ERJ6GEYF333 | M 33KOHM,J,1/10W | 1 | |
| R422 | ERJ6GEYF472 | M 4.7KOHM,F,1/10W | 1 | |
| R423 | ERJ6GEYG221 | M 220 OHM,J,1/10W | 1 | |
| R424 | ERJ6GEYJ223 | M 22KOHM,J,1/10W | 1 | |
| R425 | ERJ6ENF1802 | M 18KOHM, 1/10W | 1 | |
| R426 | ERJ6GEYG103 | M 10KOHM,J,1/10W | 1 | |
| R428 | ERJ6GEYG103 | M 10KOHM,J,1/10W | 1 | |
| R429 | ERJ6GEYJ4R7 | M 4.7 OHM,J,1/10W | 1 | |
| R430 | D1AB4303A023 | CHIP RESISTOR | 1 | |
| R431 | ERJ6GEYG103 | M 10KOHM,J,1/10W | 1 | |
| R432 | D1AB4303A023 | CHIP RESISTOR | 1 | |
| R433 | ERJ6RBD123V | M 12KOHM, 1/10W | 1 | |
| R436 | ERJ8GEYJ153 | M 15KOHM, J,1/8W | 1 | |
| R437 | ERJ6GEYG183 | M 18KOHM,J,1/10W | 1 | |
| R438 | ERJ6GEYG331 | M 330 OHM,G,1/10W | 1 | |
| R439 | ERG12SJ120 | M 12 OHM, J,1/2W | 1 | |
| R440 | ERJ8GEYJ474 | M 470KOHM, J,1/8W | 1 | |
| R441,42 | D1AB6803A023 | CHIP RESISTOR | 2 | |
| R443 | EVMAASA00B23 | CONTROL 2KOHMB | 1 | |
| R444 | ERJ6GEYF123 | M 12KOHM,J,1/10W | 1 | |
| R445 | D1AB6803A023 | CHIP RESISTOR | 1 | |
| R448,49 | D0XGR10J0003 | M 0.1OOHM,J, 5W | 2 | |
| R450 | ERJ6GEYJ4R7 | M 4.7 OHM,J,1/10W | 1 | |
| R451 | ERJ6GEYF333 | M 33KOHM,J,1/10W | 1 | |
| R452 | ERJ6GEYG103 | M 10KOHM,J,1/10W | 1 | |
| R454 | ERJ6GEYG103 | M 10KOHM,J,1/10W | 1 | |
| R455 | ERJ6GEYF123 | M 12KOHM,J,1/10W | 1 | |
| R456 | ERJ6GEYF333 | M 33KOHM,J,1/10W | 1 | |
| R458 | ERJ6GEYF472 | M 4.7KOHM,F,1/10W | 1 | |
| R460 | ERDS2TC0 | C 0 OHM, 1/4W | 1 | |
| R461 | ERJ6GEYG103 | M 10KOHM,J,1/10W | 1 | |
| R463 | ERJ6GEYF333 | M 33KOHM,J,1/10W | 1 | |
| R464 | ERJ6ENF3302 | M 33KOHM, 1/10W | 1 | |
| R467 | ERJ6GEYG102 | M 1KOHM,J,1/10W | 1 | |
| R468,69 | ERX12SJ1R0 | M 0.1 OHM, J,1/2W | 2 | |
| R471 | ERJ8GEYJ332 | M 3.3KOHM, J,1/8W | 1 | |
| R472-74 | D1AB5603A023 | CHIP RESISTOR | 3 | |
| R476,77 | ERJ14YJ181 | M 181 OHM, J,1/4W | 2 | |
| R478 | ERJ8GEYJ220 | M 22 OHM, J,1/8W | 1 | |
| R482 | ERJ8GEYJ220 | M 22 OHM, J,1/8W | 1 | |
| R483 | D0BF334JA030 | CHIP RESISTOR | 1 | ⚠ |
| R484 | ERJ6GEYF473 | M 47KOHM,J,1/10W | 1 | |
| R485 | ERJ6GEYF472 | M 4.7KOHM,F,1/10W | 1 | |
| R488 | ERJ6GEYG104 | M 100KOHM,J,1/10W | 1 | |
| R490 | ERJ6GEYG103 | M 10KOHM,J,1/10W | 1 | |
| R491 | ERJ6GEYG821 | M 820 OHM,J,1/10W | 1 | |
| R493 | ERG12SJ120 | M 12 OHM, J,1/2W | 1 | |
| R498 | ERG3SJ101 | M 100 OHM, J, 3W | 1 | |
| R500 | ERJ6GEYJ224 | M 220KOHM,J,1/10W | 1 | |
| R501 | ERJ6GEYG154 | M 150KOHM,J,1/10W | 1 | |
| R502,03 | ERJ6GEYJ224 | M 220KOHM,J,1/10W | 2 | |
| R505 | ERJ8GEYJ330 | M 33 OHM, J,1/8W | 1 | |
| R507 | ERJ6GEYG221 | M 220 OHM,J,1/10W | 1 | |
| R508 | ERJ6GEYG182 | M 1.8KOHM,J,1/10W | 1 | |

| Ref. No. | Part No. | Part Name & Description | Pcs | Remarks |
|---|---|---|---|---|
| R510 | ERJ8GEY0R00 | M 0 OHM, 1/8W | 1 | |
| R512 | ERJ6GEYG823 | M 82KOHM,J,1/10W | 1 | |
| R513 | ERJ6GEYG332 | M 3.3KOHM,J,1/10W | 1 | |
| R514 | ERJ6GEYG104 | M 100KOHM,J,1/10W | 1 | |
| R518 | ERJ6GEYG102 | M 1KOHM,J,1/10W | 1 | |
| R519 | ERJ6GEYG104 | M 100KOHM,J,1/10W | 1 | |
| R520 | ERJ6GEYJ101V | M 100 OHM,J,1/10W | 1 | |
| R523 | ERJ6GEYF473 | M 47KOHM,J,1/10W | 1 | |
| R524 | ERJ6GEYG102 | M 1KOHM,J,1/10W | 1 | |
| R526,27 | ERJ6ENF1803 | M 180KOHM, 1/10W | 2 | |
| R528 | ERJ6GEYJ4R7 | M 4.7 OHM,J,1/10W | 1 | |
| R529 | ERJ6GEYJ101V | M 100 OHM,J,1/10W | 1 | |
| R530,31 | ERJ6RBD333 | M 33KOHM,J,1/10W | 2 | |
| R532 | ERJ6GEYG102 | M 1KOHM,J,1/10W | 1 | |
| R533 | ERJ6ENF1803 | M 180KOHM, 1/10W | 1 | |
| R534 | ERJ6ENF8201 | M 8.2KOHM, 1/10W | 1 | |
| R537 | ERJ6ENF1003 | M 100KOHM, 1/10W | 1 | |
| R538 | ERJ6GEYG104 | M 100KOHM,J,1/10W | 1 | |
| R539 | ERJ6GEYG103 | M 10KOHM,J,1/10W | 1 | |
| R540,41 | ERJ6GEYG105 | M 1MOHM,J,1/10W | 2 | |
| R542 | ER0S2CKF2202 | M 22KOHM, F,1/4W | 1 | |
| R543 | ERJ6ENF3902 | M 39KOHM, 1/10W | 1 | |
| R545 | ERJ6GEYG102 | M 1KOHM,J,1/10W | 1 | |
| R546 | ERJ6GEYG104 | M 100KOHM,J,1/10W | 1 | |
| R547 | ERJ6GEYJ101V | M 100 OHM,J,1/10W | 1 | |
| R550 | ERJ6GEYG102 | M 1KOHM,J,1/10W | 1 | |
| R551 | ERJ6GEYF151 | M 150 OHM,F,1/10W | 1 | |
| R553 | ERJ6GEYJ101V | M 100 OHM,J,1/10W | 1 | |
| R555 | ERJ6GEYG102 | M 1KOHM,J,1/10W | 1 | |
| R556 | ERJ6GEYG105 | M 1MOHM,J,1/10W | 1 | |
| R557,58 | ERJ6GEYJ101V | M 100 OHM,J,1/10W | 2 | |
| R559 | ERJ6ENF8201 | M 8.2KOHM, 1/10W | 1 | |
| R560 | ERJ6ENF9101 | M 9.1KOHM, 1/10W | 1 | |
| R561 | ERJ6ENF5101 | M 5.1KOHM, 1/10W | 1 | |
| R562 | ERJ6ENF4701 | M 4.7KOHM, 1/10W | 1 | |
| R563 | ERJ6GEYJ2R2 | M 2.2 OHM,J,1/10W | 1 | |
| R564 | ERJ6GEYG104 | M 100KOHM,J,1/10W | 1 | |
| R565,66 | ERJ6GEYG105 | M 1MOHM,J,1/10W | 2 | |
| R567,68 | ERJ8GEYJ105 | M 1MOHM, J,1/8W | 2 | |
| R569 | ERJ6ENF3302 | M 33KOHM, 1/10W | 1 | |
| R570 | ERJ6GEYG104 | M 100KOHM,J,1/10W | 1 | |
| R571 | ERJ6GEYG105 | M 1MOHM,J,1/10W | 1 | |
| R572,73 | ERJ6GEYG102 | M 1KOHM,J,1/10W | 2 | |
| R574 | ERJ6GEYG331 | M 330 OHM,G,1/10W | 1 | |
| R576 | ERJ6RBD123V | M 12KOHM, 1/10W | 1 | |
| R579 | ERJ6GEYG103 | M 10KOHM,J,1/10W | 1 | |
| R581 | ERJ6GEYF473 | M 47KOHM,J,1/10W | 1 | |
| R582 | ERJ6ENF1002 | M 10KOHM, 1/10W | 1 | |
| R584 | ERJ6GEYG103 | M 10KOHM,J,1/10W | 1 | |
| R585 | ERJ6GEYF333 | M 33KOHM,J,1/10W | 1 | |
| R586 | ERJ6GEYJ223 | M 22KOHM,J,1/10W | 1 | |
| R587 | ERJ8RSJR16V | M 16 OHM, 1/8W | 1 | |
| R592 | ERJ6GEYJ223 | M 22KOHM,J,1/10W | 1 | |
| R593 | ERJ6GEYG104 | M 100KOHM,J,1/10W | 1 | |
| R594 | ERJ6GEYF151 | M 150 OHM,F,1/10W | 1 | |
| R595 | ERJ6GEYG221 | M 220 OHM,J,1/10W | 1 | |
| R596 | ERJ6GEYJ101V | M 100 OHM,J,1/10W | 1 | |

| Ref. No. | Part No. | Part Name & Description | Pcs | Remarks |
|---|---|---|---|---|
| R597,98 | ERJ6ENF3302 | M 33KOHM, 1/10W | 2 | |
| R599,00 | ERJ8ENF3900 | M 390 OHM, 1/8W | 2 | |
| R601 | ERJ6GEYJ471 | M 470 OHM,J,1/10W | 1 | |
| R603 | ERJ6GEYJ101V | M 100 OHM,J,1/10W | 1 | |
| R604 | ERJ6RBD303 | M 30KOHM,J,1/10W | 1 | |
| R605 | ERJ6GEYG103 | M 10KOHM,J,1/10W | 1 | |
| R606 | ERJ6ENF1201 | M 1.2KOHM, 1/10W | 1 | |
| R607 | ERJ6ENF2202 | M 2.2KOHM, 1/10W | 1 | |
| R608 | ERJ8GEYJ332 | M 3.3KOHM, J,1/8W | 1 | |
| R609 | ERJ6GEYG102 | M 1KOHM,J,1/10W | 1 | |
| R610 | ERJ6GEYG222 | M 2.2KOHM,J,1/10W | 1 | |
| R611 | ERDS2FJ101 | C 100 OHM, J,1/4W | 1 | |
| R612 | ERJ6GEYG222 | M 2.2KOHM,J,1/10W | 1 | |
| R613 | ERJ6ENF2402 | M 24KOHM, 1/10W | 1 | |
| R614 | ERJ6ENF3301 | M 3.3KOHM, 1/10W | 1 | |
| R616,17 | ERJ6GEYJ223 | M 22KOHM,J,1/10W | 2 | |
| R618 | ERJ6GEYG104 | M 100KOHM,J,1/10W | 1 | |
| R619 | ERJ8RQFR39 | M 0.39OHM, J,1/8W | 1 | |
| R620 | ERJ6GEYG102 | M 1KOHM,J,1/10W | 1 | |
| R622 | ERJ6ENF1603 | M 160KOHM, 1/10W | 1 | |
| R624 | ERX2SJR22P | M0.22 OHM, J, 2W | 1 | |
| R625 | ERJ6GEYF472 | M 4.7KOHM,F,1/10W | 1 | |
| R626 | ERJ6ENF1603 | M 160KOHM, 1/10W | 1 | |
| R627 | ERJ6GEYJ752 | M 7.5KOHM,J,1/10W | 1 | |
| R628 | EVMAASA00B33 | CONTROL 3KOHMB | 1 | |
| R629 | ERJ6GEYG105 | M 1MOHM,J,1/10W | 1 | |
| R630 | ERJ6GEYF472 | M 4.7KOHM,F,1/10W | 1 | |
| R631 | ERJ8GEYJ333 | M 33KOHM, J,1/8W | 1 | |
| R632 | ERJ6GEYG221 | M 220 OHM,J,1/10W | 1 | |
| R633 | ERJ6GEYG105 | M 1MOHM,J,1/10W | 1 | |
| R634 | ERJ8RQFR39 | M 0.39OHM, J,1/8W | 1 | |
| R635 | ERJ6GEYG103 | M 10KOHM,J,1/10W | 1 | |
| R636 | ERJ6ENF1603 | M 160KOHM, 1/10W | 1 | |
| R637 | ERJ8RQFR39 | M 0.39OHM, J,1/8W | 1 | |
| R639,40 | ERJ8RQFR39 | M 0.39OHM, J,1/8W | 2 | |
| R641 | ERJ6GEYF473 | M 47KOHM,J,1/10W | 1 | |
| R642-44 | ERJ8RQFR39 | M 0.39OHM, J,1/8W | 3 | |
| R645 | ERJ6GEYJ101V | M 100 OHM,J,1/10W | 1 | |
| R646,47 | ERJ14YJ330 | M 33 OHM, J,1/4W | 2 | |
| R648 | ERJ6ENF1603 | M 160KOHM, 1/10W | 1 | |
| R649 | ERJ6GEYJ223 | M 22KOHM,J,1/10W | 1 | |
| R650 | ERJ6GEYG103 | M 10KOHM,J,1/10W | 1 | |
| R651 | ERJ6ENF1002 | M 10KOHM, 1/10W | 1 | |
| R652 | ERJ6GEYF123 | M 12KOHM,J,1/10W | 1 | |
| R653 | ERJ6ENF3302 | M 33KOHM, 1/10W | 1 | |
| R654 | ERJ6GEYJ223 | M 22KOHM,J,1/10W | 1 | |
| R655 | ERJ8RSJR16V | M 16 OHM, 1/8W | 1 | |
| R656 | ERJ6ENF1803 | M 180KOHM, 1/10W | 1 | |
| R657 | ERJ6GEYF561 | M 560 OHM,F,1/10W | 1 | |
| R658 | ERJ6GEYG105 | M 1MOHM,J,1/10W | 1 | |
| R659 | ERJ6RBD303 | M 30KOHM,J,1/10W | 1 | |
| R660 | ERJ6RBD123V | M 12KOHM, 1/10W | 1 | |
| R661 | EVMAASA00B53 | CONTROL 5KOHMB | 1 | |
| R662 | ERJ6ENF1503 | M 150KOHM, 1/10W | 1 | |
| R664 | ERJ6ENF9101 | M 9.1KOHM, 1/10W | 1 | |
| R665 | EVMAASA00B23 | CONTROL 2KOHMB | 1 | |
| R669 | ERJ6ENF1503 | M 150KOHM, 1/10W | 1 | |
| R670 | ERJ6GEYG102 | M 1KOHM,J,1/10W | 1 | |

| Ref. No. | Part No. | Part Name & Description | Pcs | Remarks |
|---|---|---|---|---|
| R671 | ERJ6RBD751 | M 750 OHM,J,1/10W | 1 | |
| R672,73 | ERJ6GEYG102 | M 1KOHM,J,1/10W | 2 | |
| R674 | ERJ8GEYJ333 | M 33KOHM, J,1/8W | 1 | |
| R675 | ERJ6ENF2202 | M 2.2KOHM, 1/10W | 1 | |
| R676 | ERJ8GEYJ333 | M 33KOHM, J,1/8W | 1 | |
| R677 | ERJ6GEYJ474 | M 470KOHM,J,1/10W | 1 | |
| R678-80 | ERJ8RSJR16V | M 16 OHM, 1/8W | 3 | |
| R682 | ERJ6ENF2002 | M 20KOHM, 1/10W | 1 | |
| R683 | ERJ14YJ330 | M 33 OHM, J,1/4W | 1 | |
| R684,85 | ERJ6GEYG102 | M 1KOHM,J,1/10W | 2 | |
| R686 | ERJ6GEYG103 | M 10KOHM,J,1/10W | 1 | |
| R687 | ERJ6GEYG104 | M 100KOHM,J,1/10W | 1 | |
| R688 | ERJ6GEYG102 | M 1KOHM,J,1/10W | 1 | |
| R689 | ERJ8GEYJ472 | M 4.7KOHM, J,1/8W | 1 | |
| R690 | ERJ6GEYJ4R7 | M 4.7 OHM,J,1/10W | 1 | |
| R691 | ERJ6GEYG105 | M 1MOHM,J,1/10W | 1 | |
| R693 | ERJ6GEYJ100V | M 10 OHM,J,1/10W | 1 | |
| R695 | ERJ6RBD123V | M 12KOHM, 1/10W | 1 | |
| R696 | ERJ6GEYJ100V | M 10 OHM,J,1/10W | 1 | |
| R697 | ERJ6GEYJ4R7 | M 4.7 OHM,J,1/10W | 1 | |
| R698 | ERJ8RSJR16V | M 16 OHM, 1/8W | 1 | |
| R699 | ERJ8GEYJ105 | M 1MOHM, J,1/8W | 1 | |
| R700,01 | ERJ6ENF1503 | M 150KOHM, 1/10W | 2 | |
| R702 | ERJ6ENF1102 | M 11KOHM, 1/10W | 1 | |
| R707,08 | ERJ6GEYG102 | M 1KOHM,J,1/10W | 2 | |
| R709,10 | ERJ6GEYJ101V | M 100 OHM,J,1/10W | 2 | |
| R711,12 | ERJ6GEYG222 | M 2.2KOHM,J,1/10W | 2 | |
| R713 | ERJ6GEYG152 | M 1.5KOHM,J,1/10W | 1 | |
| R714 | ERJ6GEYG102 | M 1KOHM,J,1/10W | 1 | |
| R715 | ERJ6ENF3301 | M 3.3KOHM, 1/10W | 1 | |
| R716 | ERJ6GEY0R00V | M 0 OHM, 1/10W | 1 | |
| R717 | ERJ6GEYG122 | M 1.2KOHM,J,1/10W | 1 | |
| R718 | ERJ6GEYG103 | M 10KOHM,J,1/10W | 1 | |
| R719 | ERJ6GEYG102 | M 1KOHM,J,1/10W | 1 | |
| R720 | ERJ6GEYG152 | M 1.5KOHM,J,1/10W | 1 | |
| R721 | ERJ6GEY0R00V | M 0 OHM, 1/10W | 1 | |
| R722-24 | ERJ6GEYG102 | M 1KOHM,J,1/10W | 3 | |
| R726,27 | ERJ6GEYG222 | M 2.2KOHM,J,1/10W | 2 | |
| R729 | ERJ6GEY0R00V | M 0 OHM, 1/10W | 1 | |
| R730-38 | ERJ8GEYJ105 | M 1MOHM, J,1/8W | 9 | |
| R739 | ERJ6ENF1003 | M 100KOHM, 1/10W | 1 | |
| R740 | ERJ6GEYJ243 | M 24KOHM,J,1/10W | 1 | |
| R741 | ERJ8GEYJ205 | M 2MOHM, J,1/8W | 1 | |
| R742 | ERJ6GEYG102 | M 1KOHM,J,1/10W | 1 | |
| | | | | |
| RL401-03 | K6B1CGA00055 | REALY | 3 | ⚠ |
| | | | | |
| S401,02 | J0LT00000009 | SWITCH | 2 | ⚠ |
| | | | | |
| T401 | G4D4A0000123 | SWITCHING TRANS | 1 | |
| T402 | G4D1A0000128 | SWITCHING TRANS | 1 | ⚠ |
| T404 | ETS42LB11GAD | SWITCHING TRANS | 1 | ⚠ |
| T410 | G4D2A0000283 | SWITCHING TRANS | 1 | ⚠ |
| T601 | G4D2A0000284 | SWITCHING TRANS | 1 | |
| | | | | |
| W13 | ERJ6GEY0R00V | M 0 OHM, 1/10W | 1 | |
| W46 | ERJ6GEY0R00V | M 0 OHM, 1/10W | 1 | |
| | | | | |
| X501 | H2B400400021 | CRYSTAL | 1 | |
| | | | | |
| Z1-Z3 | K4ZZ01000206 | TERMINAL | 3 | |
| | | | | |
| ZN401,02 | D4EAD6210001 | VARISTOR | 2 | ⚠ |
| ZN403 | ERZVGAD681T2 | VARISTOR | 1 | ⚠ |
| ZN404,05 | ERZVA7D511 | VARISTOR | 2 | ⚠ |
| | | | | |